Service Manual

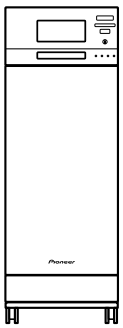

ORDER NO.
RRV2173

700 DISC CHANGER
DRM-7000
50 DISC MAGAZINE
50 DISC MAGAZINE LOCK TYPE
DRM-AF751,DRM-AL751
20 DISC HYPER MAGAZINE
DRM-AH721
POWER SUPPLAY UNIT
DRM-PW701

THIS MANUAL IS APPLICABLE TO THE FOLLOWING MODEL(S) AND TYPE(S).

Type	Model					Power Requirement	Remarks
	DRM-7000	DRM-AF751	DRM-AL751	DRM-AH721	DRM-PW701		
TUCYV/WL	O	-	-	-	O	AC100 - 240V	
WL	-	O	O	O	-	–	

● **DRM-7000 is a combination of the following components.**

700 DISC AUTO CHANGER (DRM-7000)

- **50 DISC MAGAZINE (DRM-AF751, DRM-AL751)**
- **20 DISC HYPER MAGAZINE (DRM-AH721)**
- **POWER SUPPLY UNIT (DRM-PW701)**
- **DVD-ROM DRIVE UNIT (DVD-D7361) Refer to Service Manual (Order No. RRV2174)**

CONTENTS

1. SAFETY INFORMATION 2
2. EXPLODED VIEWS AND PARTS LIST 3
3. BLOCK DIAGRAM AND SCHEMATIC DIAGRAM 38
4. PCB CONNECTION DIAGRAM 85
5. PCB PARTS LIST 112
6. ADJUSTMENT 122
7. GENERAL INFORMATION 128
7.1 DIAGNOSIS 128
7.1.1 TEST MODE 128
7.1.2 TROUBLE SHOOTING 130
7.1.3 DISASSEMBLY 138
7.1.4 PCB LOCATIONS 144
7.2 PARTS 146
7.2.1 IC 146
8. PANEL FACILITIES AND SPECIFICATIONS 149

PIONEER CORPORATION 4-1, Meguro 1-chome, Meguro-ku, Tokyo 153-8654, Japan
PIONEER ELECTRONICS SERVICE, INC. P.O. Box 1760, Long Beach, CA 90801-1760, U.S.A.
PIONEER ELECTRONIC (EUROPE) N.V. Haven 1087, Keetberglaan 1, 9120 Melsele, Belgium
PIONEER ELECTRONICS ASIACENTRE PTE. LTD. 253 Alexandra Road, #04-01, Singapore 159936

©PIONEER CORPORATION 1999

T – ZZY AUG. 1999 Printed in Japan

1. SAFETY INFORMATION

This service manual is intended for qualified service technicians; it is not meant for the casual do-it-yourselfer. Qualified technicians have the necessary test equipment and tools, and have been trained to properly and safely repair complex products such as those covered by this manual.
Improperly performed repairs can adversely affect the safety and reliability of the product and may void the warranty. If you are not qualified to perform the repair of this product properly and safely, you should not risk trying to do so and refer the repair to a qualified service technician.

WARNING
This product contains lead in solder and certain electrical parts contain chemicals which are known to the state of California to cause cancer, birth defects or other reproductive harm.

Health & Safety Code Section 25249.6 – Proposition 65

NOTICE

(FOR CANADIAN MODEL ONLY)

Fuse symbols (fast operating fuse) and/or (slow operating fuse) on PCB indicate that replacement parts must be of identical designation.

REMARQUE

(POUR MODÈLE CANADIEN SEULEMENT)

Les symboles de fusible (fusible de type rapide) et/ou (fusible de type lent) sur CCI indiquent que les pièces de remplacement doivent avoir la même désignation.

(FOR USA MODEL ONLY)

1. SAFETY PRECAUTIONS

The following check should be performed for the continued protection of the customer and service technician.

LEAKAGE CURRENT CHECK

Measure leakage current to a known earth ground (water pipe, conduit, etc.) by connecting a leakage current tester such as Simpson Model 229-2 or equivalent between the earth ground and all exposed metal parts of the appliance (input/output terminals, screwheads, metal overlays, control shaft, etc.). Plug the AC line cord of the appliance directly into a 120V AC 60 Hz outlet and turn the AC power switch on. Any current measured must not exceed 3.5 mA.

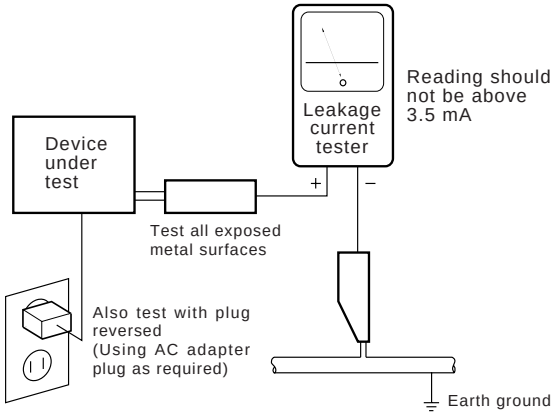

AC Leakage Test

ANY MEASUREMENTS NOT WITHIN THE LIMITS OUTLINED ABOVE ARE INDICATIVE OF A POTENTIAL SHOCK HAZARD AND MUST BE CORRECTED BEFORE RETURNING THE APPLIANCE TO THE CUSTOMER.

2. PRODUCT SAFETY NOTICE

Many electrical and mechanical parts in the appliance have special safety related characteristics. These are often not evident from visual inspection nor the protection afforded by them necessarily can be obtained by using replacement components rated for voltage, wattage , etc. Replacement parts which have these special safety characteristics are identified in this Service Manual.

Electrical components having such features are identified by marking with a ⚠ on the schematics and on the parts list in this Service Manual.

The use of a substitute replacement component which does not have the same safety characteristics as the PIONEER recommended replacement one, shown in the parts list in this Service Manual, may create shock, fire, or other hazards.

Product Safety is continuously under review and new instructions are issued from time to time. For the latest information, always consult the current PIONEER Service Manual. A subscription to, or additional copies of, PIONEER Service Manual may be obtained at a nominal charge from PIONEER.

2. EXPLODED VIEWS AND PARTS LIST

NOTES :
- *Parts marked by " NSP " are generally unavailable because they are not in our Master Spare Parts List.*
- *The ⚠ mark found on some component parts indicates the importance of the safety factor of the part. Therefore, when replacing, be sure to use parts of identical designation.*
- *Screw adjacent to ▼ mark on the product are used for disassembly.*

■ EXTERIOR GUIDE PAGES

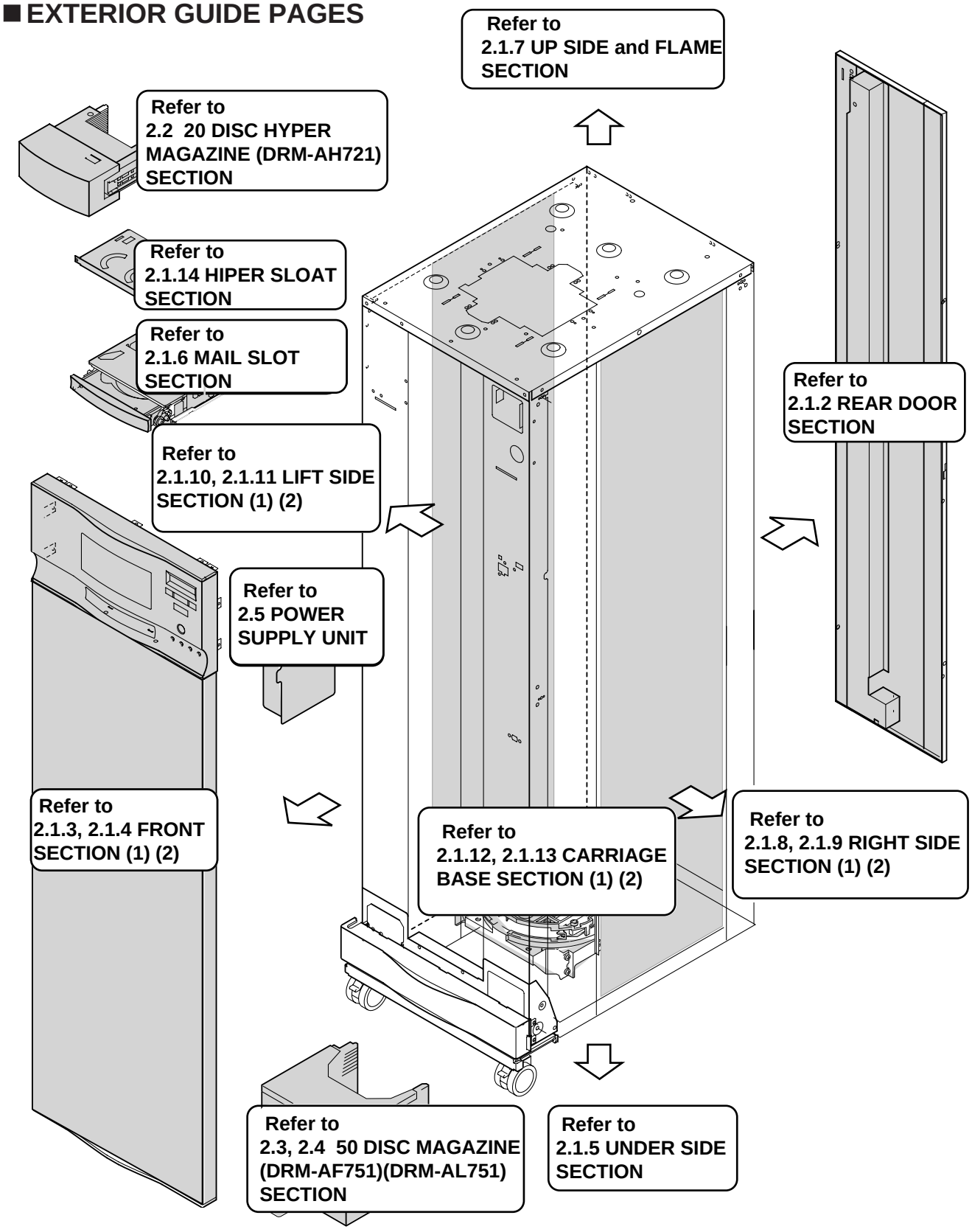

2.1 700 DISC AUTO CHANGER (DRM-7000)

2.1.1 PACKING

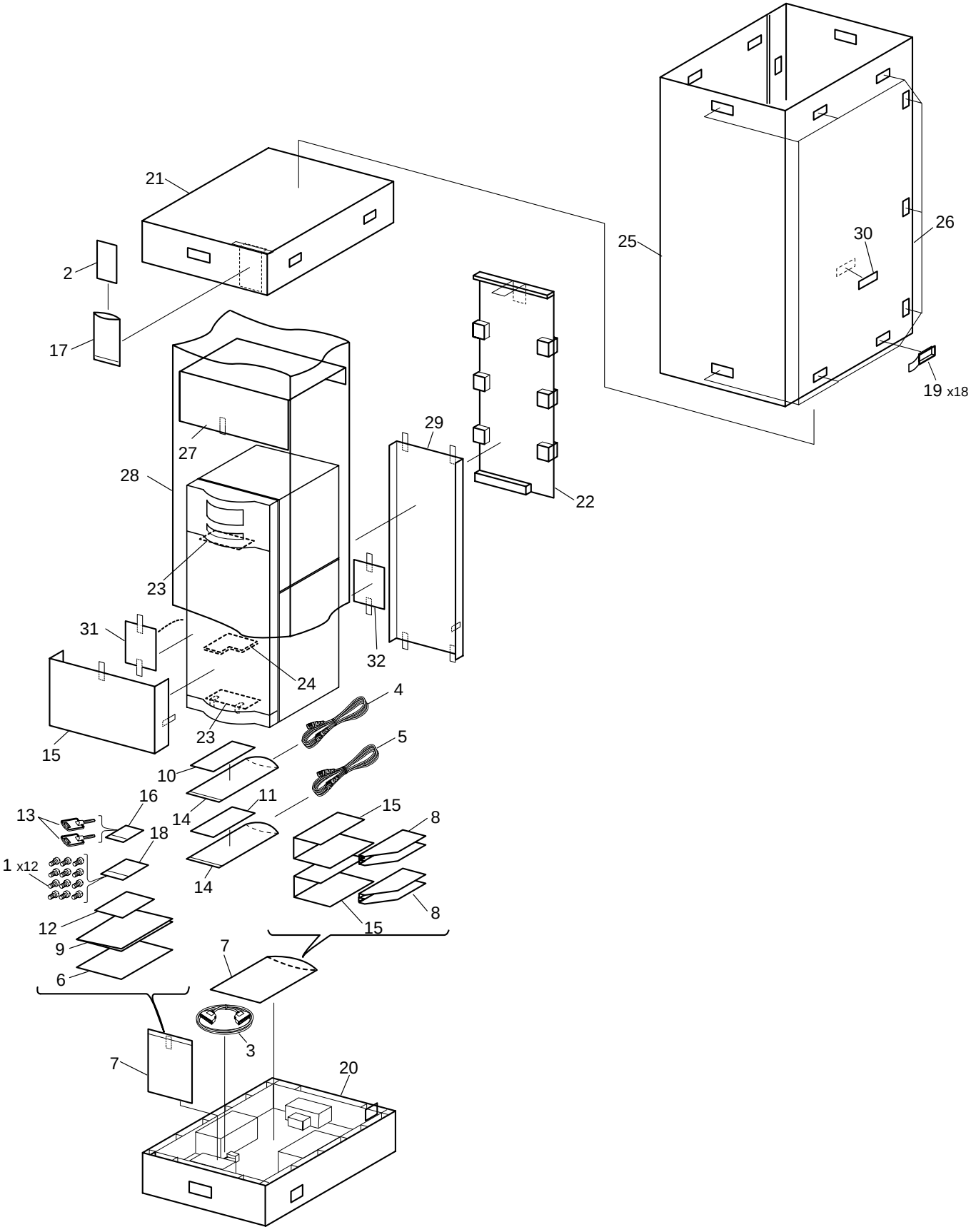

PACKING PARTS LIST

Mark	No.	Description	Part No.
	1	Screw	AMZ60P100FZK
NSP	2	Warranty Card	ARY1035
⚠	3	SCSI Cable	DDC1006
⚠	4	Power Cord (J-model)	DDG1047
⚠	5	Power Cord (Canada and US-model)	DDG1071
	6	20-Disc Hyper Dust Cover	DEC2334
	7	Polyethylene Bag	DHL1052
	8	Placement fixtures	DNH2385
	9	Operating Instructions (English/ French/ German/ Japan)	DRC1105
	10	Label (J-model)	DRW1858
	11	Label (KU-model)	DRW1859
	12	Service Netwark	DRY1176
	13	Lock Release Key	DXC1006
	14	Polyethylene Bag	OHL1007
	15	Sheet	RHC1052
NSP	16	Polyethylene Bag (50 x 70 x 0.03)	Z21-002
NSP	17	Polyethylene Bag (100 x 230 x 0.018)	Z21-010
NSP	18	Polyethylene Bag	Z21-033
	19	PP Joint	AHG-204
	20	Pad (Under)	DHA1438
	21	Pad (Upper)	DHA1439
	22	Pad (Rear)	DHA1440
	23	Spacer	DHA1445
	24	Pad	DHA1454
	25	Packing Case (Front)	DHG1939
	26	Packing Case (Rear)	DHG1940
	27	Sheet	DHL1022
	28	Polyethylene Bag	DHL1108
	29	Sheet	DHL1109
NSP	30	Label	VRW1629
NSP	31	Coution	DRY1183
	32	Rear Coution	DRY1181

2.1.2 REAR DOOR SECTION

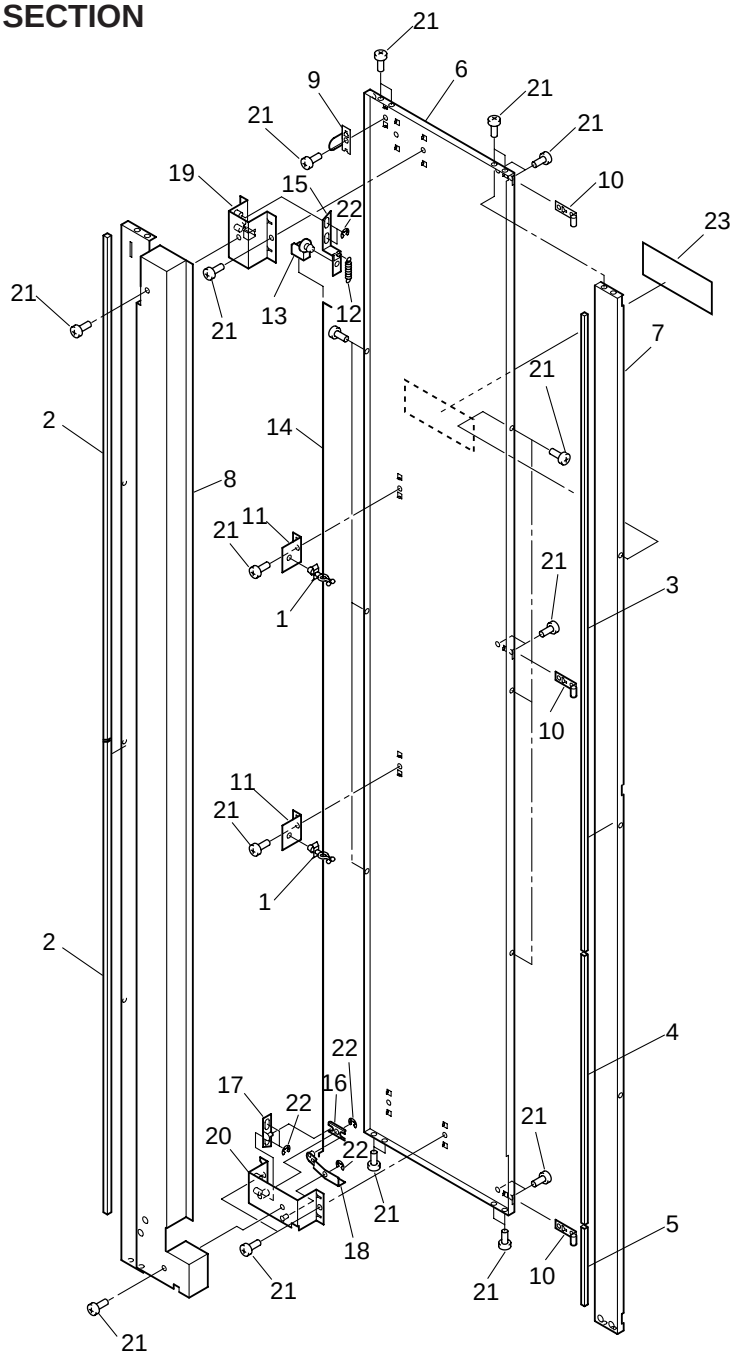

REAR DOOR SECTION PARTS LIST

Mark	No.	Description	Part No.
	1	Nip Locker	DEC2309
	2	R Door Packing S	DEC2342
	3	EMI Gusket	DEC2361
	4	EMI Gusket	DEC2362
	5	R Door Packing	DEC2364
	6	Rear Door	DNC1508
	7	R Door Stay L	DND1228
	8	R Door Stay R	DND1229
	9	R Switch Plate	DNH2416
	10	R Hinge Holder	DNH2417
	11	Nip Locker Base	DNH2424
	12	Lock Plate Spring	DBH1452
	13	Bushing	DEC1156
	14	Rod R	DLA1900
	15	Lock Plate R	DNH2412
	16	Link Plate	DNH2415
	17	Lock Plate R	DXB1710
	18	Relese Arm Assy	DXB1711
	19	Lock Plate R Assy	DXB1715
	20	Lock Plate R Assy	DXB1716
	21	Screw	BBZ30P060FMC
	22	Ering	YE30FUC
	23	Rear Door Label	DRW1969

2.1.3 FRONT SECTION (1)

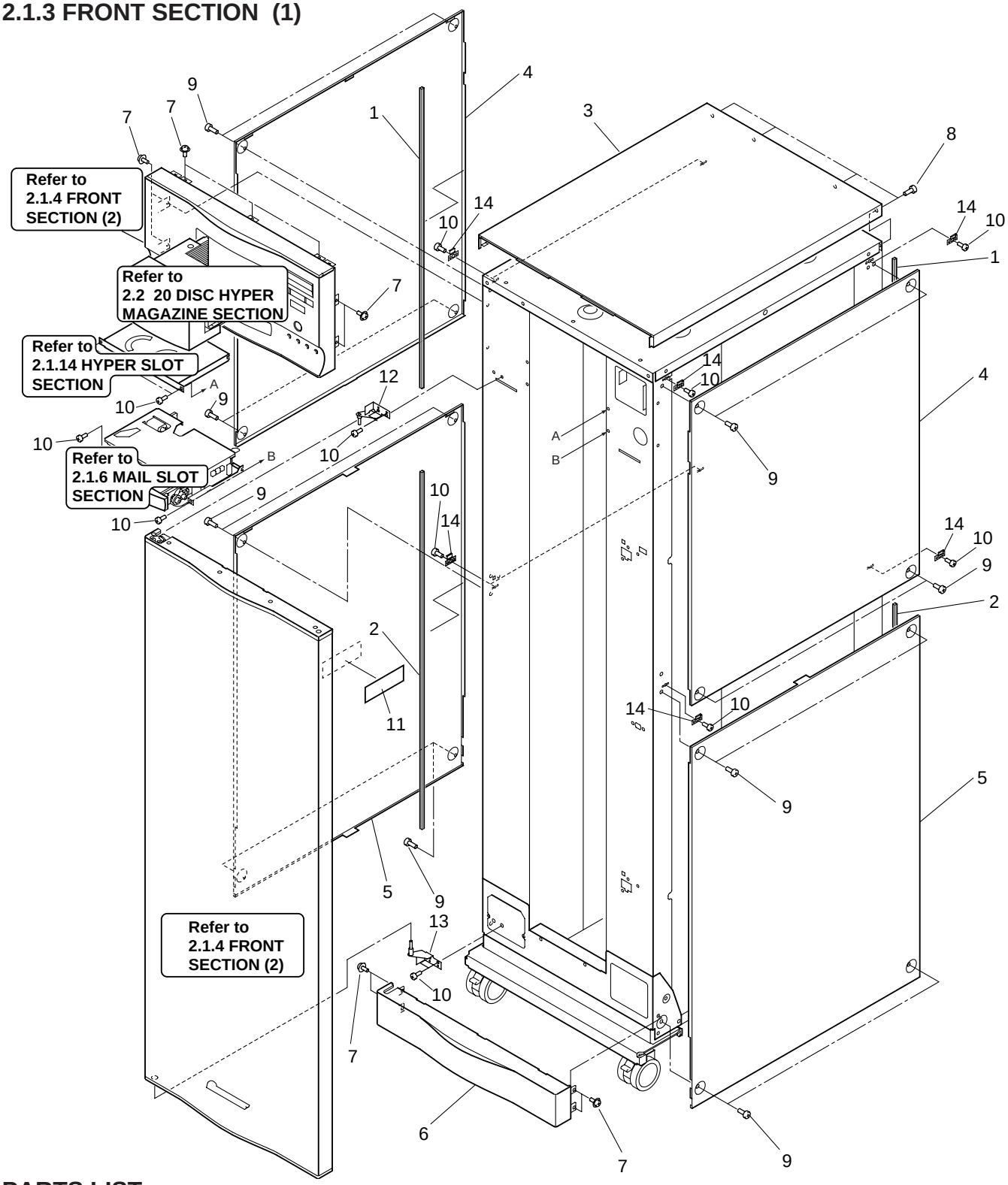

PARTS LIST

Mark	No.	Description	Part No.	Mark	No.	Description	Part No.
	1	S Panel Packing	DEC2308		8	Screw	BBT30P080FNI
	2	S Panel Packing	DEC2327		9	Screw	BBT40P080FNI
	3	Top Panel	DNE1373		10	Screw	BBZ30P060FMC
	4	Side Panel	DNE1374		11	65 Label	ARW7050
	5	Side Panel	DNE1375		12	Door Hinge Assy	DXB1712
	6	Front Panel	DNK3676		13	Door Hinge Assy	DXB1713
	7	Screw	ABZ30P060FMC		14	Side Cover Gaide	DNH2410

2.1.4 FRONT SECTION (2)

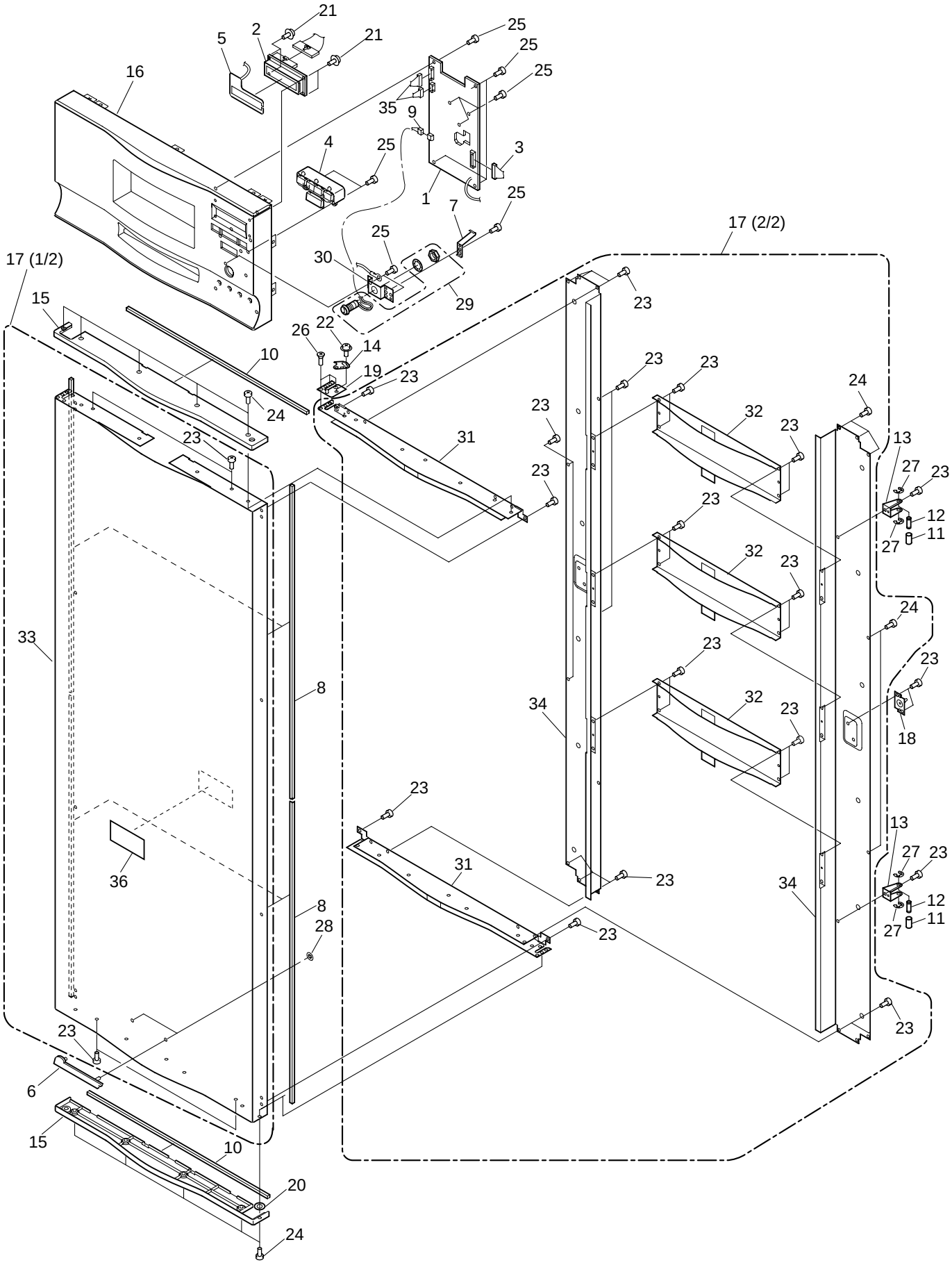

FRONT SECTION (2) PARTS LIST

Mark	No.	Description	Part No.
	1	FRPB BOARD ASSY	DWX1996
	2	LCD MODULE	DWG1507
	3	Connector Assy	DKP3481
	4	Operate Key	DAC1914
	5	Display Window	DAH1951
	6	Name Plate	DAM1082
	7	Earth Spring	DBK1175
	8	F Door Packing L	DEC2306
	9	Connector Assy	PF02PZ2B12
	10	F Door Packing S	DEC2326
	11	Roller	DLA1279
	12	Hook Shaft	DLA1778
	13	Door Hook F	DNH2408
	14	Door Lock Plate	DNH2409
	15	Door Mor	DNK3674
	16	Front Panel	DXA1875
	17	F Door Assy	DXA1879
	18	Door Holder Assy	DXB1541
	19	Door Lock Base Assy	DXB1714
	20	Spacer	REC1086
	21	Screw	IPZ30P080FMC
	22	Screw	AMZ30P060FMC
	23	Screw	BBZ30P060FMC
	24	Screw	BBZ30P080FZK
	25	Screw	BPZ30P080FCU
	26	Screw	CBZ30P080FZK
	27	Ering	YE30FUC
	28	Stopeer Ring	YP40FBT
	29	Key Lock Switch	DXC1005
	30	Key Holder Plate	DNF1622
NSP	31	F Door Cover (C)	DND1225
NSP	32	F Door Stay	DND1227
NSP	33	F Door	DNB1071
NSP	34	F Door Cover (S)	DND1226
	35	Connector Assy	DKP3461
	36	Door Lock Label	DRW1972

2.1.5 UNDER SIDE SECTION

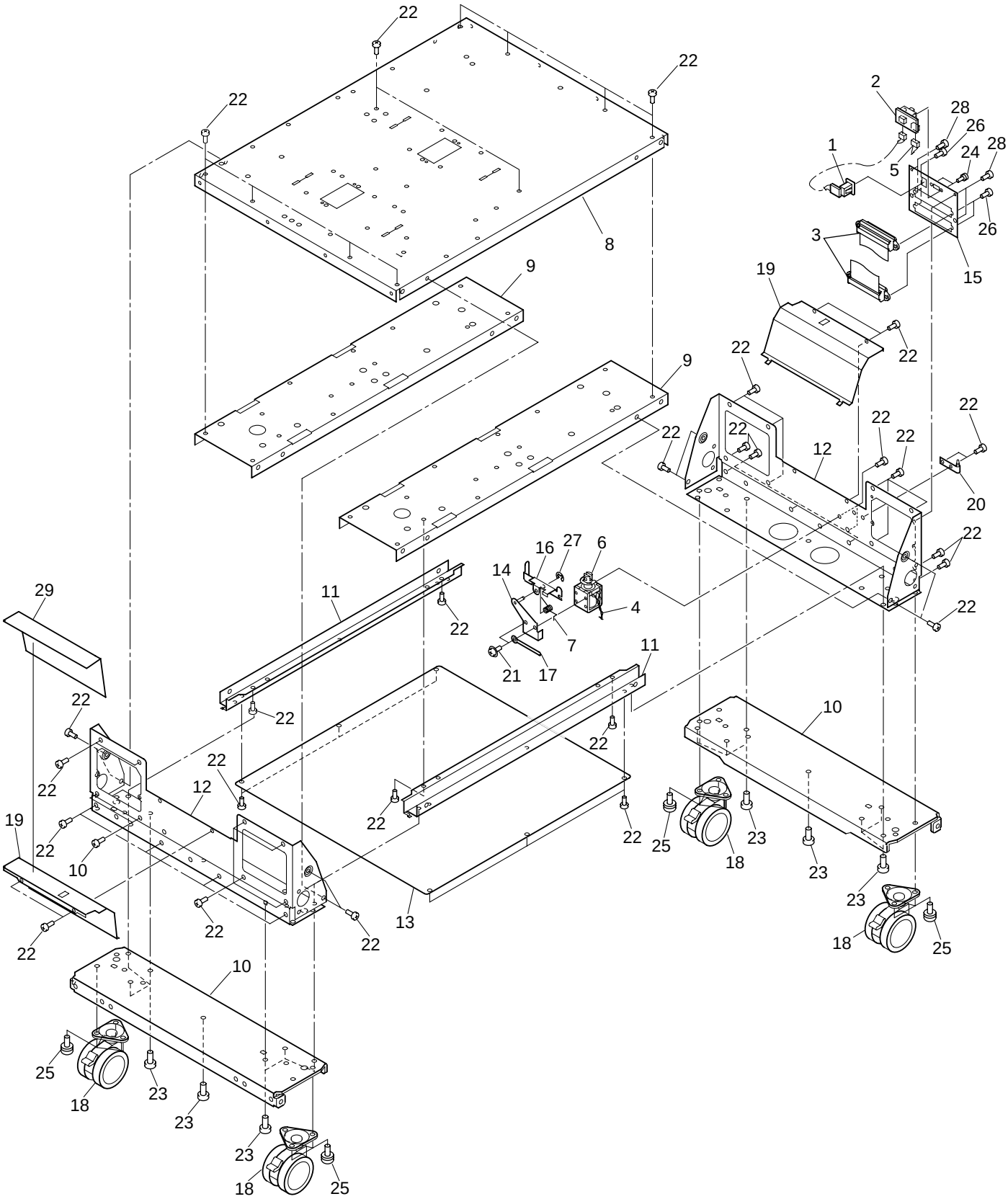

UNDER SIDE SECTION PARTS LIST

Mark	No.	Description	Part No.
	1	IDSB BOARD ASSY	DWX1995
	2	TMNB BOARD ASSY	DWX1994
	3	Connector Assy	DKP3465
	4	Connector Assy	DKP3478
	5	Connector Assy	PF05PP6B32
⚠	6	Plunger	DXP1044
	7	Plunger Spring B	DBH1450
NSP	8	Under Chassis	DNA1243
	9	Under Plate	DND1220
	10	Caster Frame	DND1221
	11	Side Guard Stay	DND1222
	12	Flame Cover	DND1223
	13	Botome Cover	DND1230
	14	Plunger Base	DNH2196
	15	Rear Plate SCSI	DNH2375
	16	Lock Lever R	DNH2411
	17	Cord Clamper	RNH-184
	18	Caster 79S	SXK1037
NSP	19	Wore	DNH2382
	20	R Door Hinge Assy B	DXB1718
	21	Screw	AMZ30P060FMC
	22	Screw	BBZ30P060FMC
	23	Screw	BBZ40P120FZK
	24	Screw	PMA26P040FMC
	25	Screw	PMA60P100FMC
	26	Screw	PMZ30P100FNI
	27	E Ring	YE30FUC
	28	Screw	BBT30P060FZK
	29	Siping Label	DRW1956

2.1.6 MAIL SLOT SECTION

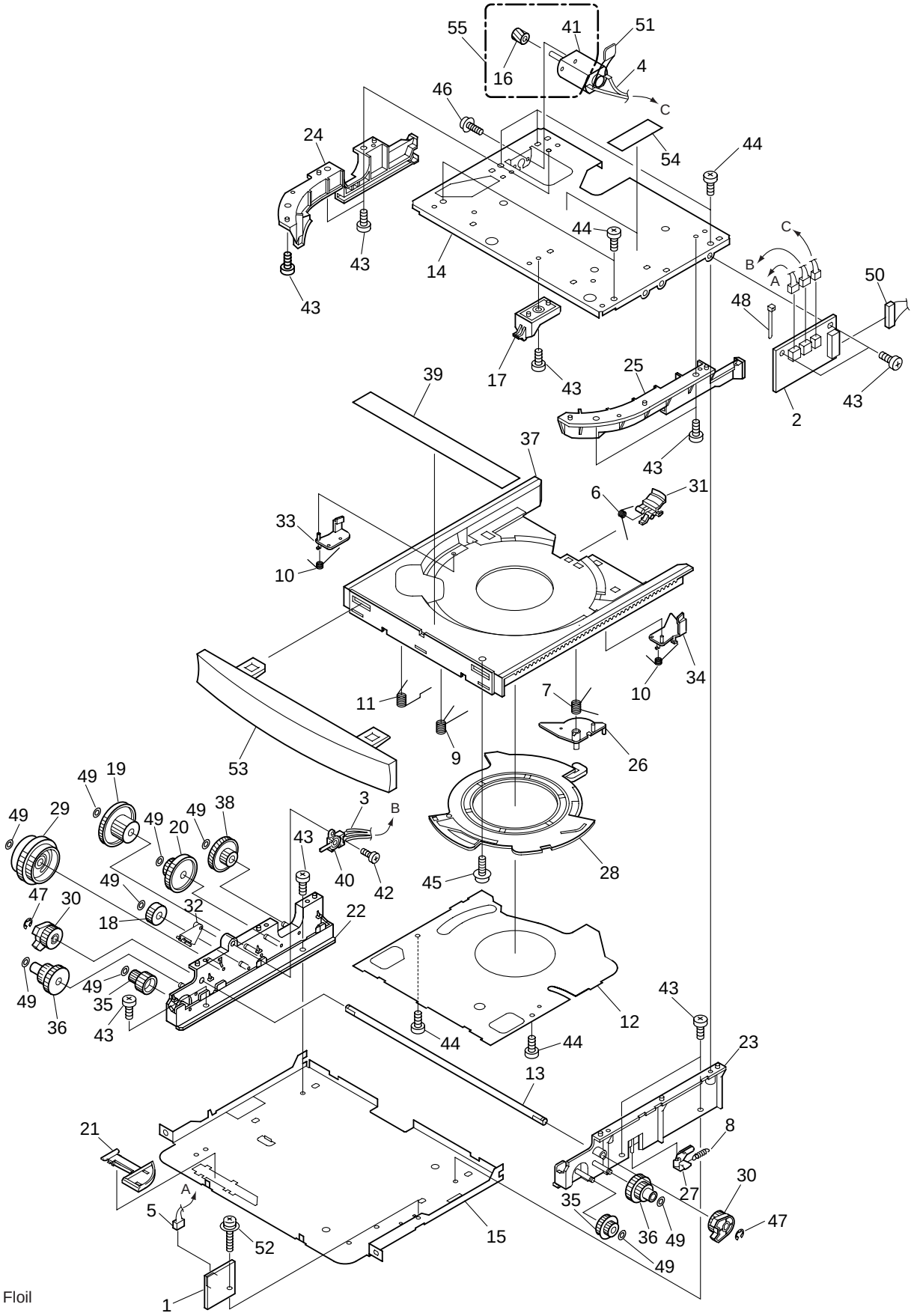

MAIL SLOT SECTION PARTS LIST

Mark	No.	Description	Part No.
	1	MSDB BOARD ASSY	DWX1985
	2	MSTB BOARD ASSY	DWX1984
	3	Connector Assy	DKP3280
	4	Connector Assy	PF02PY-D20
	5	Connector Assy	PF03PP-B07
	6	Stopper Spring	DBH1343
	7	DSL Spring 1	DBH1344
	8	DSL Spring 2	DBH1345
	9	Stopper Lever Spring 1	DBH1346
	10	DH Spring	DBH1347
	11	Stopper Lever Spring 2	DBH1348
	12	Tray Under Cover	DEC2002
	13	Tray Syncro Shaft	DLA1776
	14	U Base	DNH2208
	15	Mechanasm Base	DNH2209
	16	Motor Gear	DNK3254
	17	Guide S	DNK3294
	18	Gear 5	DNK3295
	19	Gear 6	DNK3296
	20	Gear 7	DNK3297
	21	Tray Selector	DNK3300
	22	Rail (L) Assy	DNK3302
	23	Rail (R) Assy	DNK3303
	24	Guide L	DNK3304
	25	Guide R	DNK3305
	26	DS Lever 1	DNK3306
	27	DS Lever 2	DNK3307
	28	Stopper Lever	DNK3308
	29	Cam Gear (T)	DNK3309
	30	Cam F Gear	DNK3310
	31	Stopper	DNK3311
	32	Tray Switch Lever	DNK3312
	33	Disc Holder TL	DNK3313
	34	Disc Holder TR	DNK3314
	35	Gear 1	DNK3315
	36	Gear 2	DNK3316
	37	Tray	DNK3317
	38	CL Gear (A)	DNK3363
	39	Tray Caution Label	DRW1804
	40	Lever Switch	DSK1003
NSP	41	Motor	PXM1002
	42	Screw	BBZ26P080FMC
	43	Screw	BBZ30P060FMC
	44	Screw	BPZ30P080FCU
	45	Screw	IPZ30P080FMC
	46	Screw	PMH20P040FMC
	47	E Ring	YE30FUC
	48	Binder	Z09-056
	49	Washer	WT26D047D050
	50	Connector Assy	PF08PP2B10
	51	Capacitor (C2)	CFTLA224J50
	52	Screw	PMH20P100FMC
	53	Tray Bezel	DNK3677
NSP	54	Tape	ZTA-570S-10BK
	55	Clamp Motor Assy-S	DXX2336

2.1.7 UP SIDE and FLAME SECTION

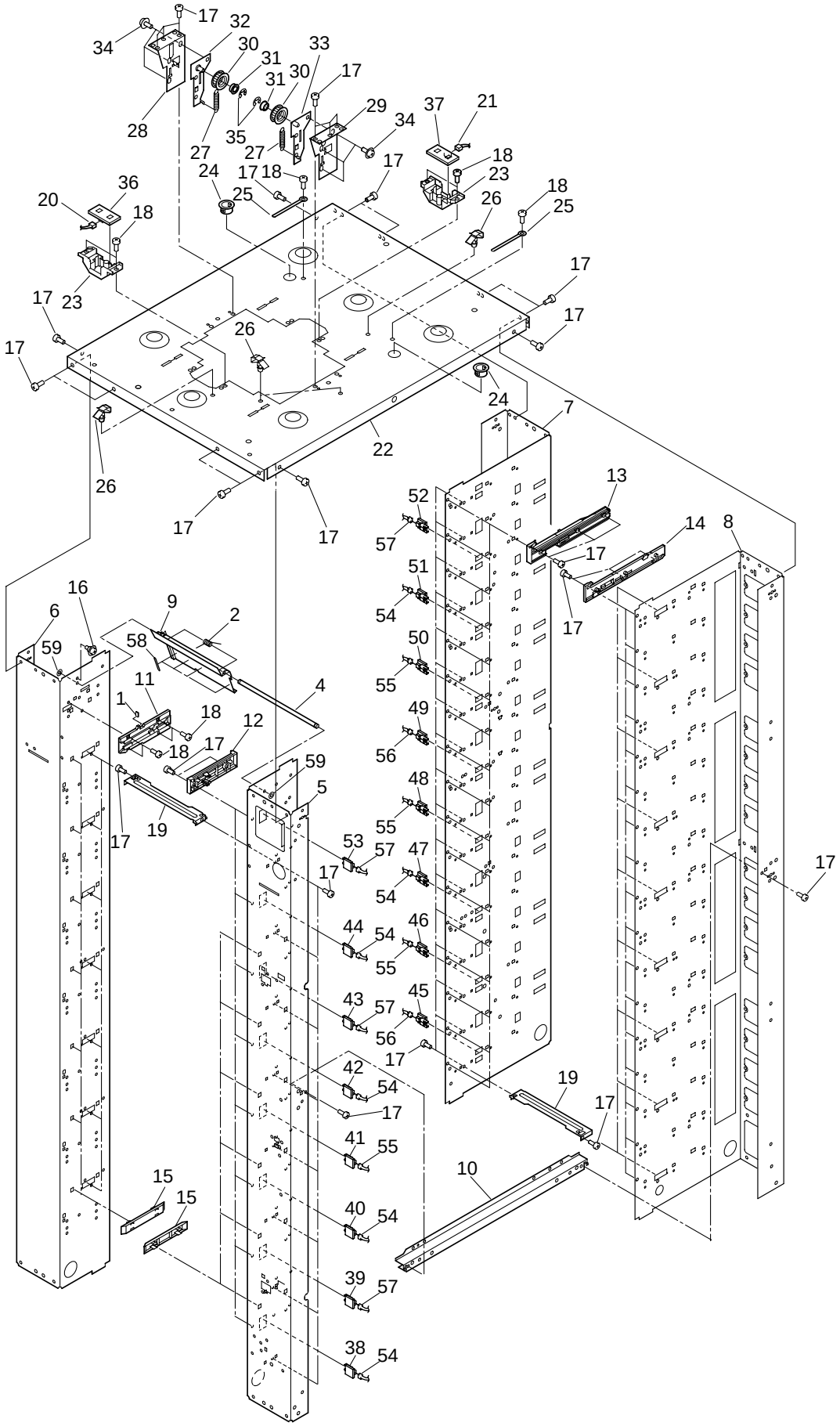

UP SIDE and FLAME SECTION PARTS LIST

Mark	No.	Description	Part No.
	1	Shutter Cushion	DEC2328
	2	HP Shutter Spring	DBH1446
	3	• • • • •	
	4	HP Shutter Shaft	DLA1888
NSP	5	Corner Flame FR	DND1216
NSP	6	Corner Flame FL	DND1217
NSP	7	Corner Flame RL	DND1218
NSP	8	Corner Flame RR	DND1219
	9	HP Shutter	DNH2400
	10	Side Guard Stay	DND1222
	11	Magazine Guide L	DNK3660
	12	Magazine Guide R	DNK3661
	13	PL Guide L	DNK3662
	14	PL Guide R	DNK3663
	15	Screw Cover	DNK3664
	16	Screw	VBA1039
	17	Screw	BBZ30P060FMC
	18	Screw	BBZ30P080FZK
	19	Bridge N	DNH2388
	20	Connector Assy	PF03PP-B42
	21	Connector Assy	PF03PP2B22
NSP	22	Upper Chassis	DNA1244
	23	Upper Sensor Cover	DNK3682
NSP	24	Bush 15	PEC1019
	25	Cord Clamper	RNH-184
NSP	26	Mini Clamp	VEC1597
	27	S Belt Spring	DBH1334
	28	UP Holder Plate L	DNF1598
	29	UP Holder Plate R	DNF1599
	30	Upper Pulley	DNK3652
	31	Bearing	DXB1544
	32	UP Holder L Assy	DXB1700
	33	UP Holder R Assy	DXB1701
	34	Screw	AMZ30P060FMC
	35	E Ring	YE30FUC
	36	MDOT1 BOARD ASSY	DWX1989
	37	MDOT2 BOARD ASSY	DWX1988
	38	TMRB 1 BOARD ASSY	DWX1966
	39	TMRB 2 BOARD ASSY	DWX1967
	40	TMRB 3 BOARD ASSY	DWX1968
	41	TMRB 4 BOARD ASSY	DWX1969
	42	TMRB 5 BOARD ASSY	DWX1970
	43	TMRB 6 BOARD ASSY	DWX1971
	44	TMRB 7 BOARD ASSY	DWX1972
	45	TMRB 8 BOARD ASSY	DWX1973
	46	TMRB 9 BOARD ASSY	DWX1974
	47	TMRB 10 BOARD ASSY	DWX1975
	48	TMRB 11 BOARD ASSY	DWX1976
	49	TMRB 12 BOARD ASSY	DWX1977
	50	TMRB 13 BOARD ASSY	DWX1978
	51	TMRB 14 BOARD ASSY	DWX1979
	52	TMRB 15 BOARD ASSY	DWX1980
	53	TMRB 16 BOARD ASSY	DWX1997
	54	Connector Assy	PF03PP-B20
	55	Connector Assy	PF03PP-B30
	56	Connector Assy	PF03PP-B40
	57	Connector Assy	PF03PP-B10
	58	Shutter Pad	DEC2328
	59	Washer	WT260D047D050

2.1.8 RIGHT SIDE SECTION (1)

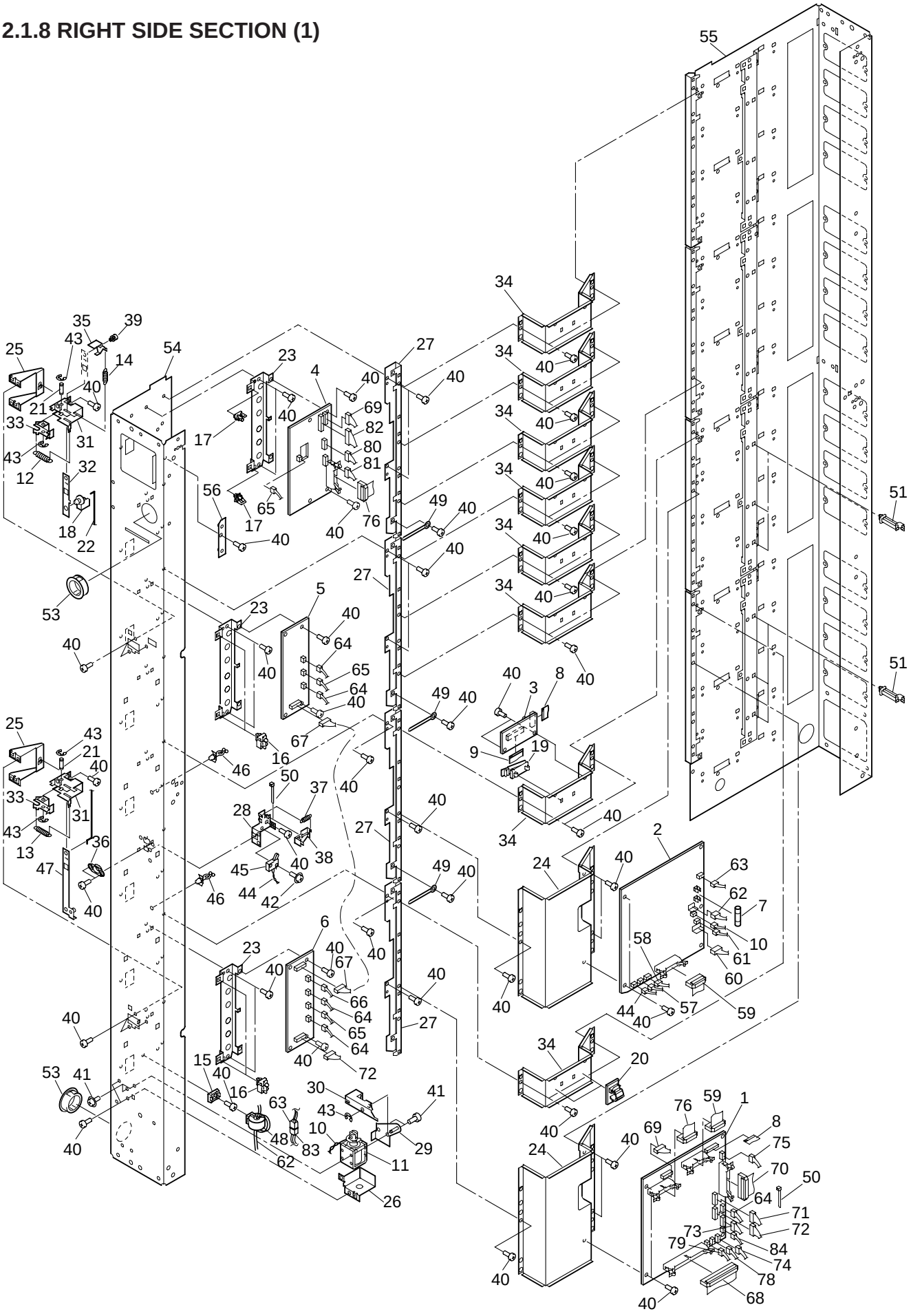

RIGHT SIDE SECTION (1) PARTS LIST

Mark	No.	Description	Part No.
	1	MMCB BOARD ASSY	DWX1945
	2	VMDB BOARD ASSY	DWX1981
	3	FCNB BOARD ASSY	DWX1946
	4	HMIF BOARD ASSY	DWX1983
	5	MIF2F BOARD ASSY	DWX1959
	6	MIF1F BOARD ASSY	DWX1958
⚠	7	Fuse (4.0A)	REK1028
	8	F.F.C. 20P	DDD1143
	9	F.F.C. 30P	DDD1144
	10	Connector Assy	DKP3477
⚠	11	Plunger	DXP1044
	12	Spring A	DBH1080
	13	O Spring	DBH1125
	14	Lock Spring	DBH1351
	15	F Clamp Holder	DEC1266
	16	Pierce Hold	DEC1678
NSP	17	Card Edge Spacer	DEC1702
	18	Bushing	DEC1156
	19	Clamp	DEC1850
	20	CKN Clamp	DEC2324
	21	Hook Shaft	DLA1778
	22	Rod F	DLA1899
	23	PCB Stay	DNF1609
	24	Main Board Stay	DNF1610
	25	Lock Assy Base	DNF1620
	26	Plunger Base	DNF1621
	27	Edge Guard Stay	DNF1626
	28	Door Switch Base	DNF1625
	29	Plunger Base	DNH2196
NSP	30	Lock Lever	DNH1654
	31	Lock Base	DNH2200
NSP	32	Link Plate	DNH2235
NSP	33	Lock Arm B	DNH2236
	34	Flex Cover Stay	DNH2384
	35	Stopper	DNH2423
	36	Door Guide	DNK3065
	37	Door Switch Spring	RBH1369
	38	Door Switch Plate B	RNE1685
	39	Rebette	VEC1178
	40	Screw	BBZ30P060FMC

Mark	No.	Description	Part No.
	41	Screw	AMZ30P060FMC
	42	Screw	AMZ26P080FMC
	43	E Ring	YE30FUC
	44	Connector Assy	DKP3475
	45	Switch	DSK1007
	46	Nip Locker	DEC2309
	47	Link Plate Assy	DXB1612
NSP	48	Ferrite Clamp	DTH1177
	49	Cord Clamper	RNH-184
	50	Binder	Z09-056
	51	Pierce Hold	DEC2296
	52	• • • • •	
	53	Bush	DEC2295
NSP	54	Corner Flame FR	DND1216
NSP	55	Corner Flame RR	DND1219
	56	HP Guide Plate R Assy	DXB1709
	57	Connector Assy	DKP3476
	58	Connector Assy	PF04PP2B55
	59	Connector Assy	DKP3473
	60	Connector Assy	DKP3454
	61	Connector Assy	DKP3478
	62	Connector Assy	DKP3458
	63	Connector Assy	DKP3460
	64	Connector Assy	PF03PP-B20
	65	Connector Assy	PF03PP-B10
	66	Connector Assy	PF03PP-B30
	67	Connector Assy	PF09PP-B55
	68	Connector Assy	DKP3465
	69	Connector Assy	DKP3480
	70	Connector Assy	DKP3470
	71	Connector Assy	DKP3493
	72	Connector Assy	PF09PP2B65
	73	Connector Assy	PF06EE-B65
	74	Connector Assy	PF05PP6B32
	75	Connector Assy	DKP3482
	76	Connector Assy	DKP3474
	77	• • • • •	
	78	Connector Assy	DKP3491
	79	Connector Assy	DKP3492
	80	Connector Assy	PF08PP4B15
	81	Connector Assy	PF08PP2B10
	82	Connector Assy	DKP3481
	83	Connector Assy	DKP3459
	84	Connector Assy	DKP3479

2.1.9 RIGHT SIDE SECTION (2)

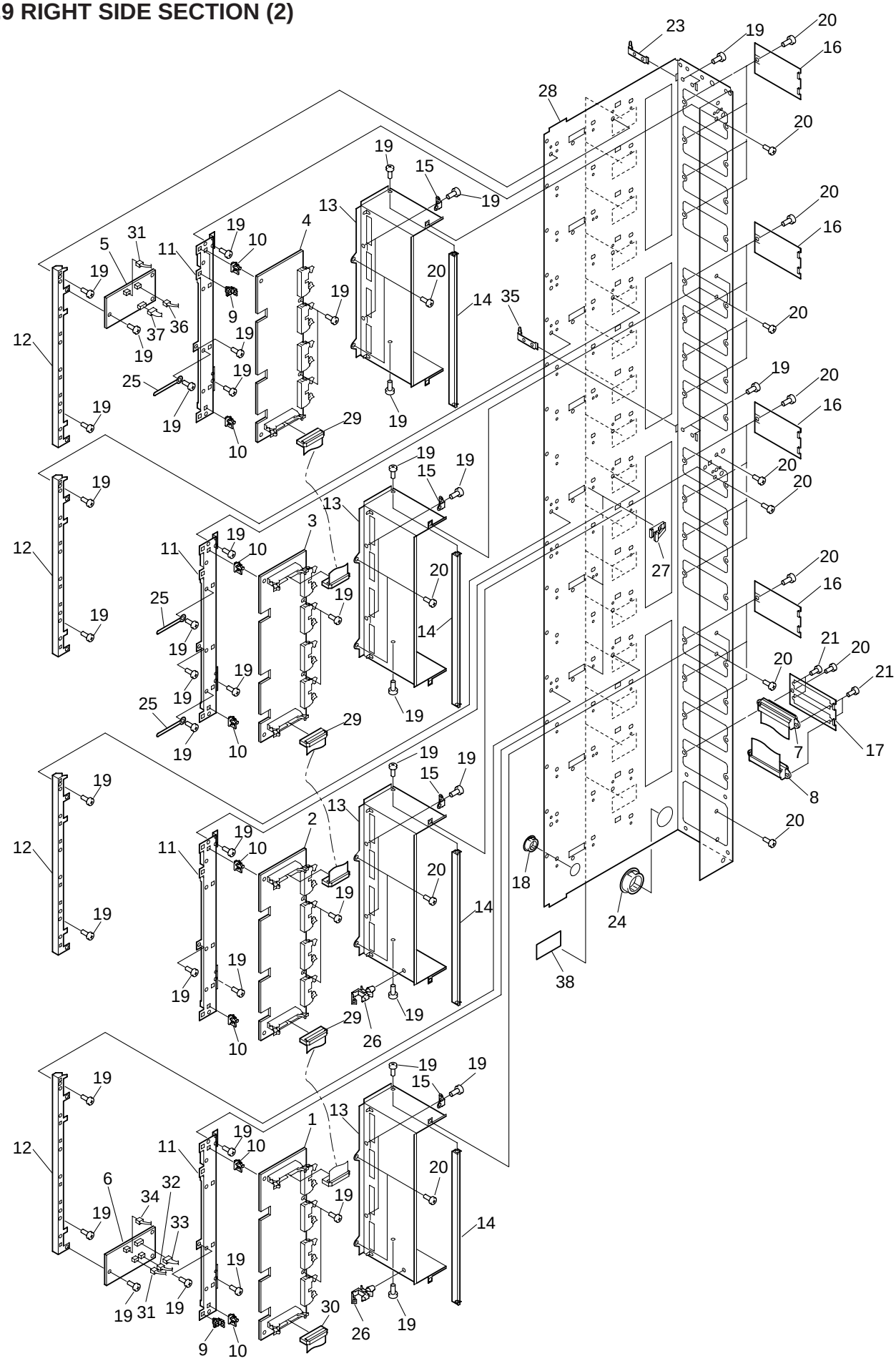

RIGHT SIDE SECTION (2) PARTS LIST

Mark	No.	Description	Part No.
	1	DIFB1 BOARD ASSY	DWX1952
	2	DIFB2 BOARD ASSY	DWX1953
	3	DIFB3 BOARD ASSY	DWX1956
	4	DIFB4 BOARD ASSY	DWX1957
	5	SIFB1 BOARD ASSY	DWX1987
	6	SIFB2 BOARD ASSY	DWX1990
	7	Connector Assy	DKP3466
	8	Connector Assy	DKP3467
	9	Pierce Hold	DEC1678
NSP	10	Card Edge Spacer	DEC1702
	11	Rear Board Stay	DNF1617
	12	Edge Guard Stay	DNF1626
NSP	13	Corner Hole Cover	DNH2376
	14	Hole Cover Stay	DNH2377
	15	Hole Cover Plate	DNH2378
	16	Rear Terminal Cover	DNH2383
	17	Terminal Plate	DNH2403
NSP	18	Bush	PEC1019
	19	Screw	BBZ30P060FMC
	20	Screw	BBT30P060FZK
	21	Screw	PMZ30P100FNI
	22	Screw	BBT30P060FZK
	23	R Door Hinge Assy A	DXB1717
	24	Bush	DEC2295
	25	Cord Clamper	RNH-184
	26	Loacking Wire Sadle	DEC1717
NSP	27	Clamp	DEC2026
NSP	28	Corner Flame RR	DND1219
	29	Connector Assy	DKP3472
	30	Connector Assy	DKP3470
	31	Connector Assy	PF03PP-B42
	32	Connector Assy	PF03PP2B30
	33	Connector Assy	PF05PP-B20
	34	Connector Assy	PF04PP2B55
	35	R Door Hinge Assy L	DXB1722
	36	Connector Assy	PF03PP2B22
	37	Connector AssY	DKP3482
	38	Bay Label RR	DRW1955

2.1.10 LEFT SIDE SECTION (1)

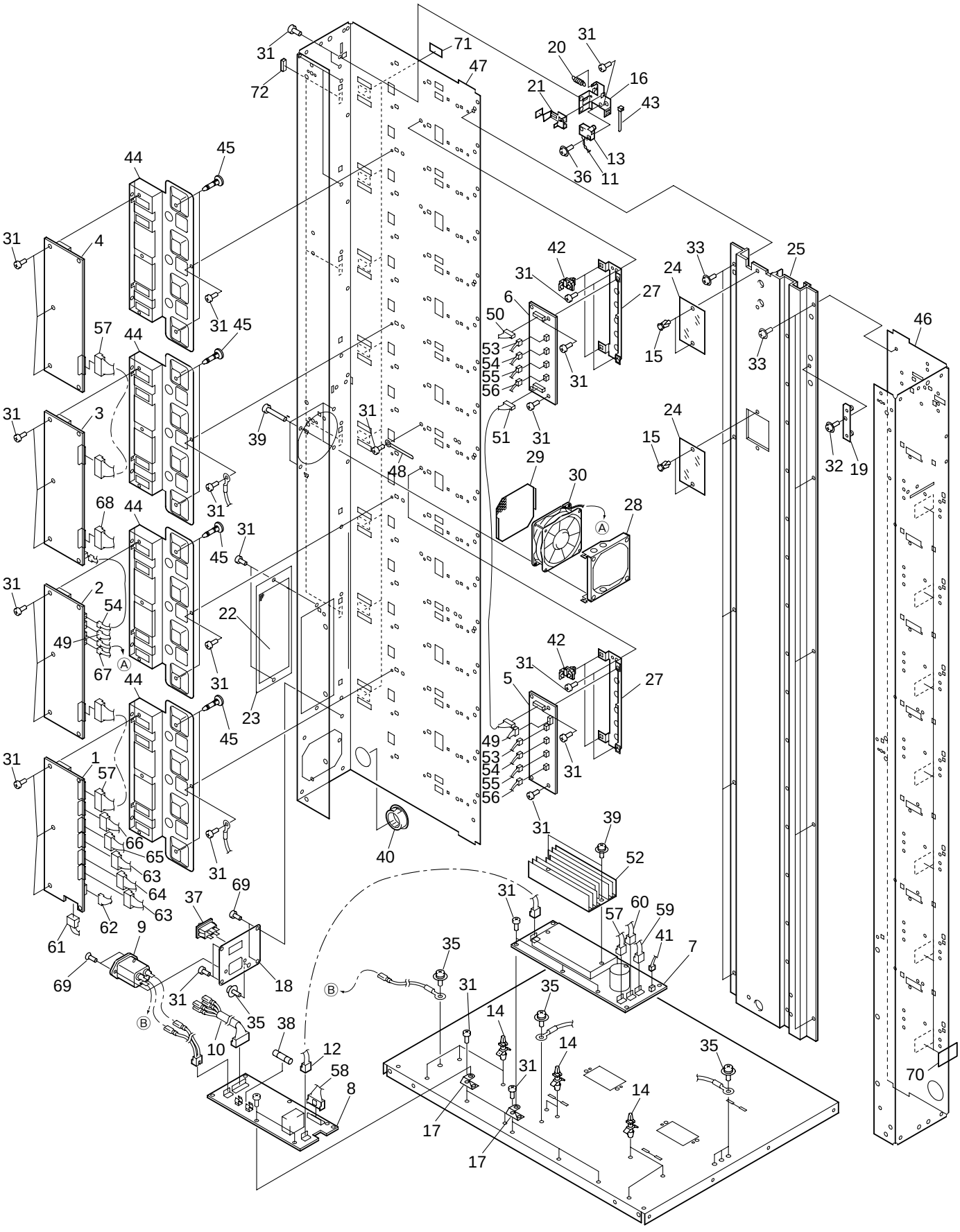

LEFT SIDE SECTION (1) PARTS LIST

Mark	No.	Description	Part No.
	1	PIF1 BOARD ASSY	DWR1317
	2	PIF2 BOARD ASSY	DWR1318
	3	PIF3 BOARD ASSY	DWR1319
	4	PIF4 BOARD ASSY	DWR1320
	5	MIF1R BOARD ASSY	DWX1954
	6	MIF2R BOARD ASSY	DWX1955
	7	PFCB BOARD ASSY	DWR1315
	8	ACFB BOARD ASSY	DWR1316
⚠	9	3P Inlet Assy	DKN1194
⚠	10	Connector Assy	DKP3441
	11	Connector Assy	DKP3476
⚠	12	Connector AssY	DKP3442
	13	Slide Switch	DSK1007
NSP	14	PCB Spacer	AEC1188
	15	Rivet	VEC1907
	16	Door Switch Base	DNF1625
	17	PW Plate	DNF1612
	18	Rear Plate PW	DNH2374
	19	HP Guide Plate L Assy	DXB1708
	20	Door Switch Spring	RBH1369
	21	Door Switch Plate B	RNE1685
	22	Net	DED1140
	23	Vent Plate	DNF1616
	24	AL Cover	DEC2325
	25	Side Rail	DNH2373
	26	• • • • •	
	27	PCB Stay	DNF1609
	28	Fan Bracket	DNF1614
	29	Fan Filter	DNH1548
⚠	30	Fan Motor	DXM1130
	31	Screw	BBZ30P060FMC
	32	Screw	BBZ30P080FZK
	33	Screw	ABZ30P080FMC
	34	Screw	CBZ30P080FZK
	35	Screw	PMB40P080FMC
	36	Screw	AMZ26P080FMC
⚠	37	Power Switch	DSA1027
⚠	38	Fuse (6.3A)	REK1106
	39	Screw	PMZ40P350FMC
	40	Bush	DEC2295
	41	Connector Assy	DKP3479
	42	Pierce Hold	DEC1678
	43	Binder	Z09-056
	44	Stay	DNF1611
	45	Locking Spacer	DEC2298
NSP	46	Corner Flame FL	DND1217
NSP	47	Corner FlAme RL	DND1218
NSP	48	Cord Clamper	DNF1128
	49	Connector AssY	PF05PP-B12
	50	Connector AssY	DKP3493
	51	Connector AssY	PF09PP-B55
	52	Heat Sink	DEF1016
	53	Connector Assy	PF03PP-B10
	54	Connector Assy	PF03PP-B20
	55	Connector Assy	PF03PP-B30
	56	Connector Assy	PF04PP-B40
	57	Connector Assy	DKP3455
⚠	58	Connector Assy	DKP3446
	59	Connector Assy	DKP3443
	60	Connector Assy	DKP3444
	61	Connector Assy	DKP3454
	62	Connector Assy	PF06EE-B65
	63	Connector Assy	DKP3450
	64	Connector Assy	DKP3451
	65	Connector Assy	DKP3452
	66	Connector Assy	DKP3453
	67	Connector Assy	PG03MM-F40
	68	Connector Assy	DKP3449
	69	Screw	BBT30P060FZK
	70	Bay Label FL	DRW1953
	71	Bay Label RL	DRW1954
	72	EMI Gusket (25)	DEC2363

2.1.11 LEFT SIDE SECTION (2)

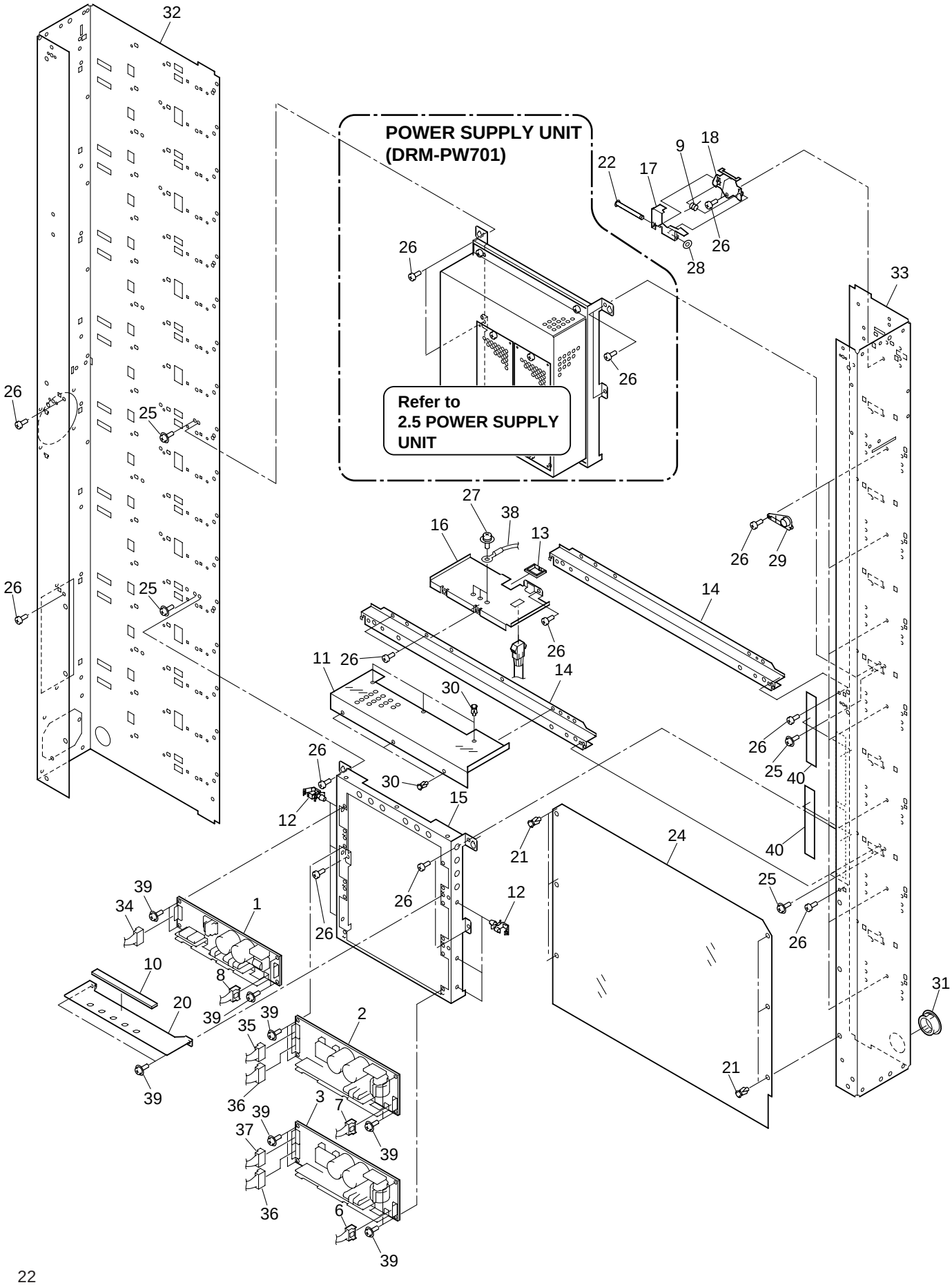

LEFT SIDE SECTION (2) PARTS LIST

Mark	No.	Description	Part No.
⚠	1	SW REGURATOR	DWR1321
⚠	2	SW REGURATOR	DWR1322
⚠	3	SW REGURATOR	DWR1323
	4	• • • • •	
	5	• • • • •	
⚠	6	Connector Assy	DKP3443
⚠	7	Connector Assy	DKP3444
⚠	8	Connector Assy	DKP3445
	9	HP Shutter Lock Spring	DBH1449
	10	Sheet	DEB1421
	11	Cover Sheet B	DEC2294
	12	Locking Wire Saddle	DEC1717
NSP	13	Edge Guard (A)	DEC1143
	14	Side Guard Stay	DND1222
	15	PW Base A	DNH2379
	16	Connect Plate	DNF1615
	17	HP Shutter Lock	DNH2386
	18	Shutter Lock Holder	DNH2387
	19	• • • • •	
	20	Heat Sink	DNG1078
	21	Rivet	DEC2297
	22	Clamp Shaft	VLL1299
	23	• • • • •	
	24	Cover Sheet A	DEC2293
	25	Screw	DBA1029
	26	Screw	BBZ30P060FMC
	27	Screw	PMB40P080FMC
	28	Washer	WT26D047D050
NSP	29	Rack Hole Cover	DNK3666
	30	Rivet	VEC1907
	31	Bush	DEC2295
NSP	32	Corner Flame FL	DND1217
NSP	33	Corner Flame RL	DND1218
	34	Connector Assy	DKP3453
	35	Connector Assy	DKP3452
	36	Connector Assy	DKP3450
	37	Connector Assy	DKP3451
	38	Connector Assy	DKP3462
	39	Screw	ABZ30P060FMC
	40	Tape	DED1141

2.1.12 CARRIAGE BASE SECTION (1)

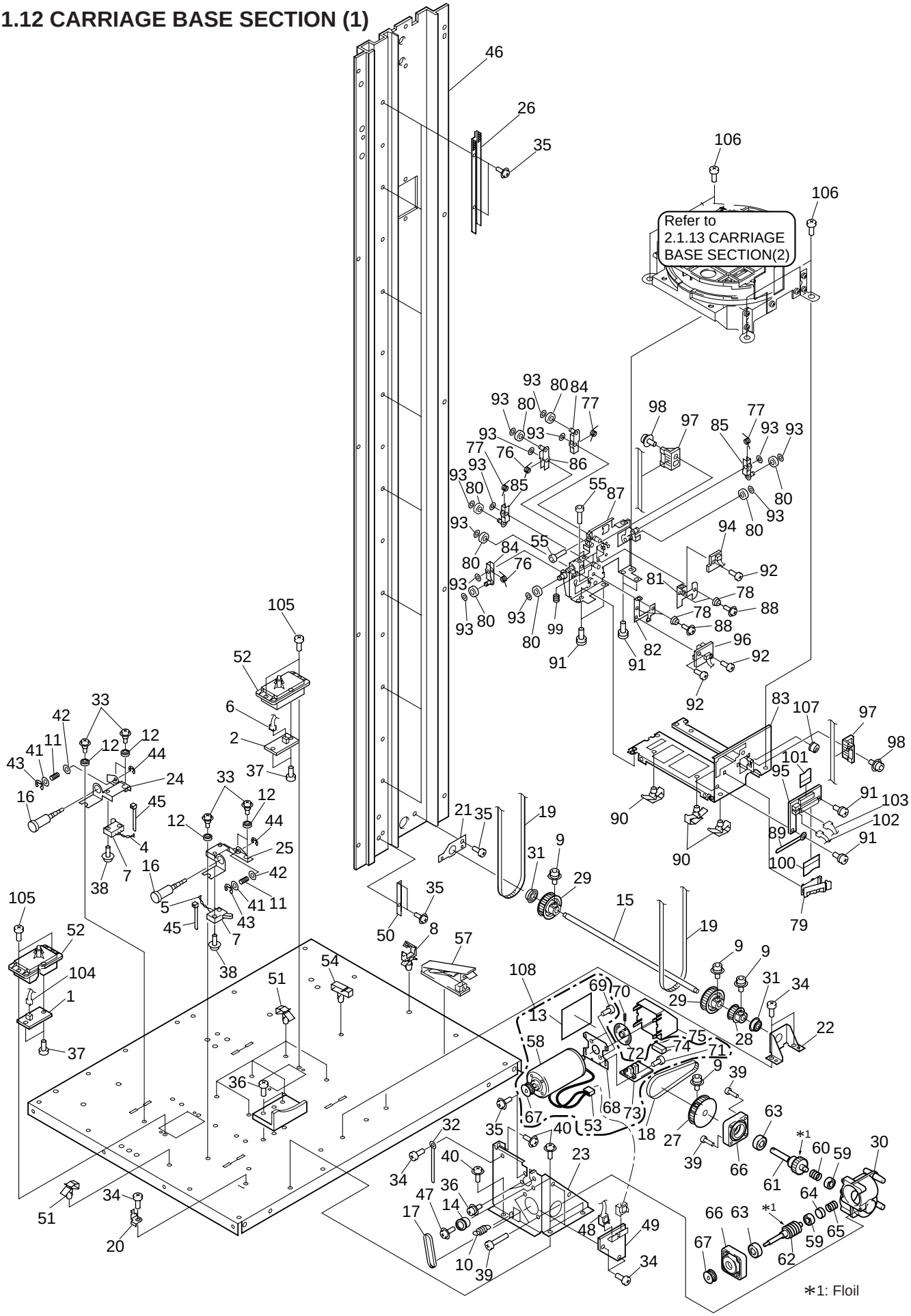

CARRIAGE BASE SECTION (1) PARTS LIST

Mark	No.	Description	Part No.
	1	MDOR1 BOARD ASSY	DWX1992
	2	MDOR2 BOARD ASSY	DWX1991
	3	Connector Assy	DKP3460
	4	Connector Assy	DKP3492
	5	Connector Assy	DKP3491
	6	Connector Assy	PF03PP2B30
⚠	7	Slide Switch	DSK1007
	8	Locking Wire Saddle	DEC1717
	9	Bolt	DBA1099
	10	D Belt Spring	DBH1333
	11	Shippung Spring	DBH1453
	12	Float Rubber	DEB1340
	13	Trans Sheet	DEC2280
	14	Motor Sleeve	DLA1787
	15	Synchro Shaft	DLA1880
	16	Shippung Screw	DLA1901
	17	S2M Belt (L120)	DMS1033
	18	S3M Belt (L267)	DMS1040
	19	S3M Belt (L2826)	DMS1041
NSP	20	Spring Holder	DNF1186
	21	Bearing Holder	DNF1531
	22	Bearing Holder R	DNF1600
	23	VD Motor Plate	DNF1601
	24	Shippung Plate L	DNF1627
	25	Shippung Plate R	DNF1629
	26	Encoder Plate	DNH2368
	27	D Pulley W	DNK3266
	28	D Pulley S	DNK3267
	29	Synchro Pulley	DNK3653
NSP	30	Gear Box	DNS1181
	31	Bearing	DXB1544
	32	Cord Clamper	RNH-184
	33	Screw	VBA1016
	34	Screw	BBZ30P060FMC
	35	Screw	AMZ26P040FMC
	36	Screw	AMZ30P060FMC
	37	Screw	BPZ30P080FCU
	38	Screw	AMZ26P080FMC
	39	Screw	BBZ30P160FMC
	40	Screw	ABZ30P060FMC
	41	Washer	WA60F130M050
	42	Washer	WA50F120M050
	43	E Ring	YE50FUC
	44	E Ring	YE30FUC
	45	Binder	Z09-056
	46	Side Rail	DNH2373
	47	Screw	AMZ30P080FMC
	48	Connector Assy	DKP3458
	49	CNNB BOARD ASSY	DWX1993
	50	Initial Plate	DNH2369
NSP	51	Mini Clamp	VEC1597
	52	Under Sensor Cover	DNK3683
	53	Connector Assy	DKP3457
	54	Wire Clip (A)	VEC1355
	55	Screw	SMZ26P100FZK
	56	Belt Guard R	DNF1641
	57	Cable Clamp (50P)	DEC2331
	58	VD Motor	DXM1086
	59	Bearing	DXB1719
	60	Worm Wheel Spring	DBH1364
	61	Worm Wheel Assy	DLA1905
	62	Worm Gear Assy	DLA1906
	63	Bearing	DXB1609
	64	Bearing Holder	DLA1418
	65	GB Spring	DBH1148
	66	Frange	DNS1023
	67	Motor Pulley	DNK3265
	68	VME Plate	DNH1268
	69	Screw	AMZ30P040FMC
	70	Screw	ZMD26H030FBT
	71	Screw	AMZ20P060FMC
	72	Encoder Disc Assy	DXB1160
	73	ENCB BOARD ASSY	DWX1982
	74	Connector Assy	DKP3459
	75	Motor Cover	RNK2068
	76	Guide Spring A	DBH1328
	77	Guide Spring B	DBH1329
	78	ADJ.Plate Spring	DBH1330
	79	Clamp	DEC1850
	80	Guide Roller	DLM1028
	81	ADJ. Plate	DNF1603
	82	Phase ADJ.Plate	DNF1604
	83	Side Plate R	DNH2372
	84	Guide Plate A Assy	DXB1596
	85	Guide Plate B Assy	DXB1597
	86	Guide Plate C Assy	DXB1702
	87	Side Plate L Assy	DXB1703
	88	Screw	PBA-125
	89	Cord Clamper	RNH-184
NSP	90	Clamp	VEC1597
	91	Screw	PMA30P060FMC
	92	Screw	BMZ26P040FMC
	93	Washer	WT31D054D050
	94	UPSE BOARD ASSY	DWX1951
	95	DCMB1 BOARD ASSY	DWX1947
	96	DNSE BOARD ASSY	DWX1950
	97	Belt Stopper A	DNK3651
	98	Bolt 8	VLL-378
	99	Phase ADJ.Spring	DBH1441
	100	F.E.C 30P	DDD1144
	101	F.F.C 20P	DDD1145
	102	Connector Assy	PG03MR-E32
	103	Connector Assy	PG04MR-E30
	104	Connector Assy	PF03PP-B42
	105	Screw	BBZ30P080FZK
	106	Screw	PMB30P060FMC
	107	Bush	DNK3318
	108	VD Motor Assy-S	DXX2450

2.1.13 CARRIAGE BASE SECTION (2)

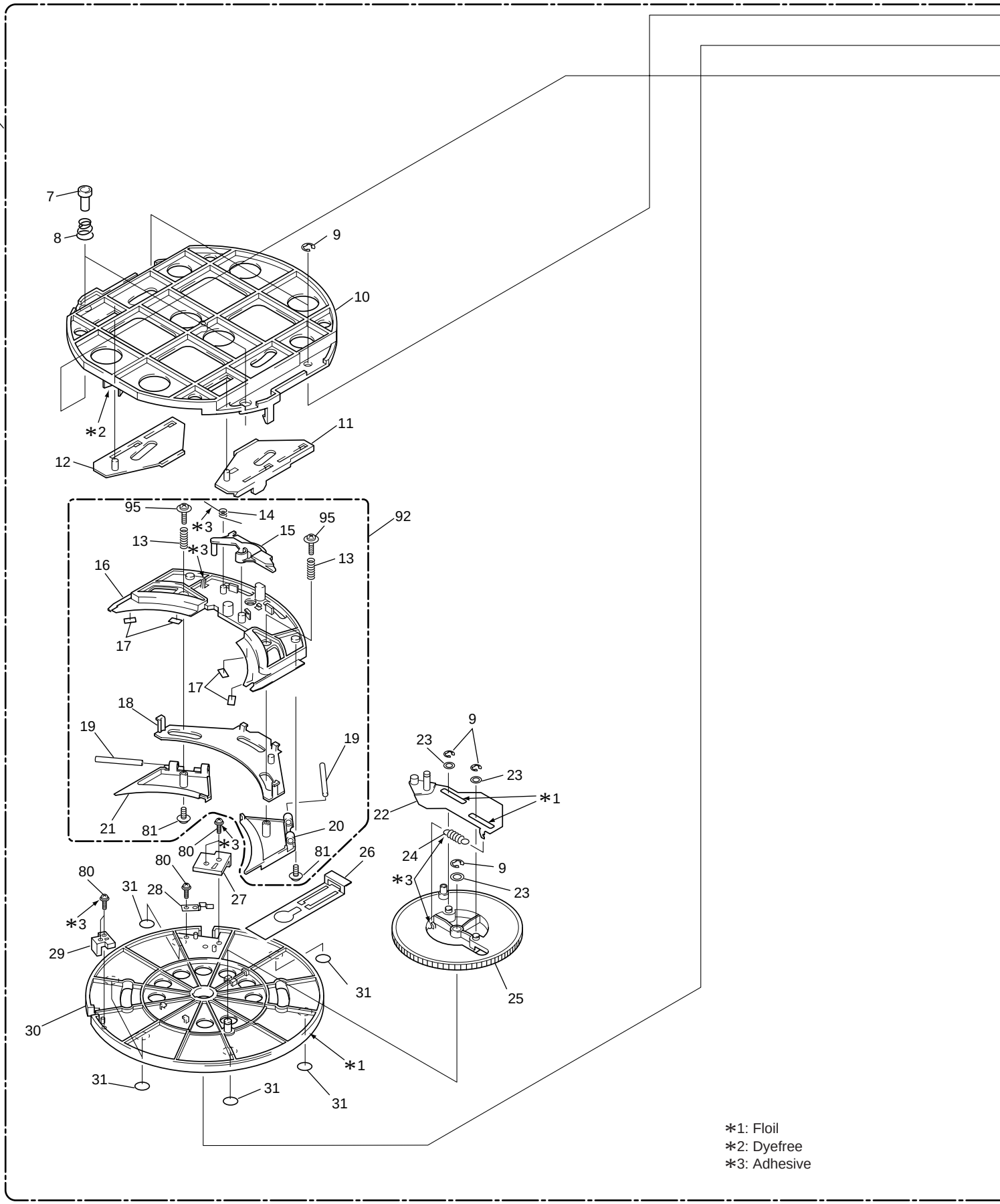

*1: Floil
*2: Dyefree
*3: Adhesive

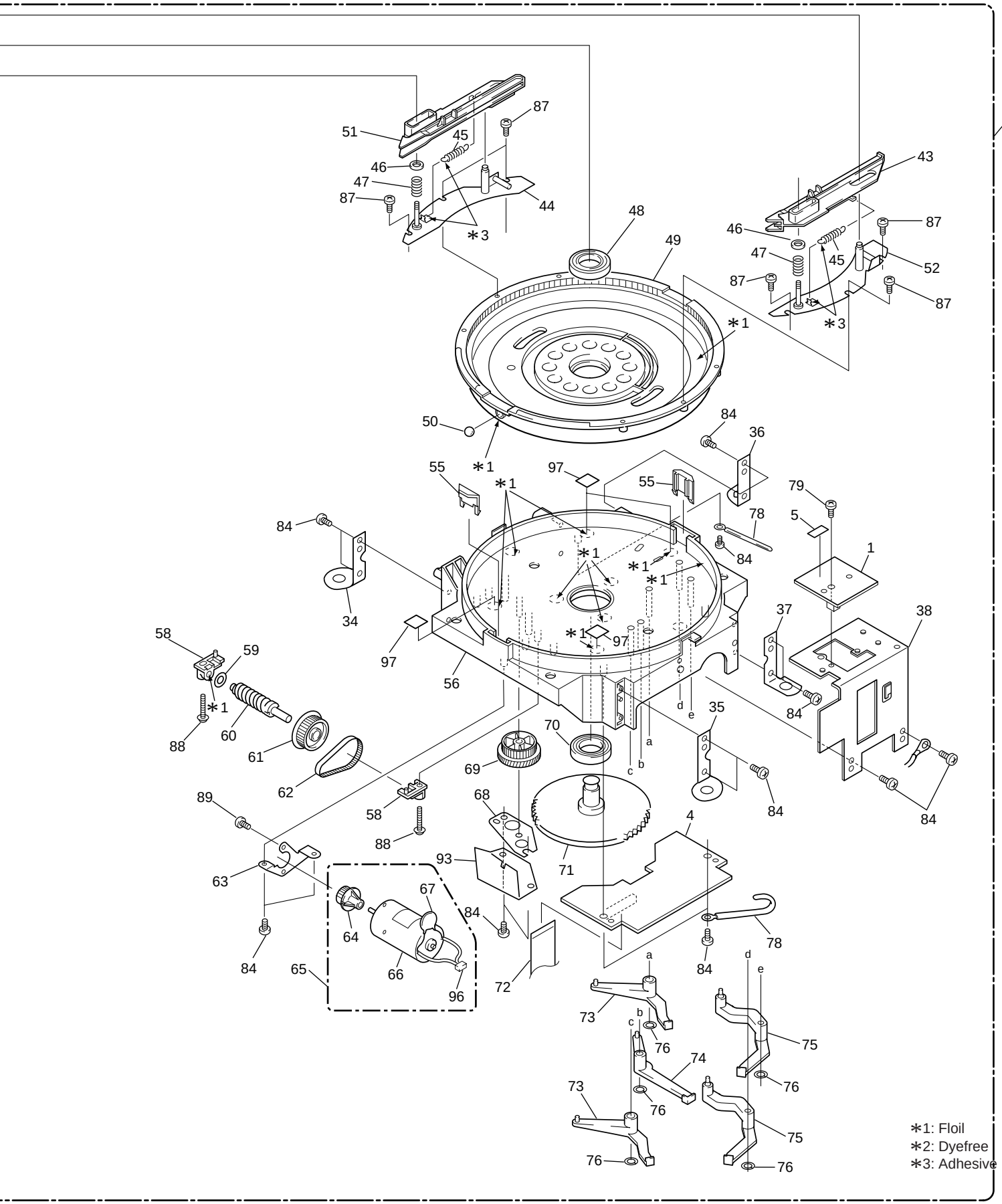

∗1: Floil
∗2: Dyefree
∗3: Adhesive

CARRIAGE BASE SECTION (2) PARTS LIST

Mark	No.	Description	Part No.
	1	DSEB BOARD ASSY	DWX1949
	2	• • • • •	
	3	• • • • •	
	4	DCMB 2 BOARD ASSY	DWX1948
	5	Damp Sheet	VEX1021
	6	• • • • •	
	7	DG Height Pin	DLA1773
	8	D Guide Spring 2	DBH1352
	9	E Ring	YE25FUC
	10	Upper Plate	DNK3252
	11	Upper Slider L	DNK3274
	12	Upper Slider R	DNK3275
	13	Chuck Spring 1	DBH1336
	14	D Release Spring A	DBH1337
	15	D Release Arm	DNK3264
	16	Chuck A	DNK3260
	17	Rubber Sheet (100)	DEB1339
	18	Chuck Cam	DNK3263
	19	Chuck 2 Guide Shaft	DLA1772
	20	Chuck 2 (L)	DNK3261
	21	Chuck 2 (R)	DNK3262
	22	Arm Assy	DXB1616
	23	Washer	WA41D065D050
	24	Spring	DBH1338
	25	Gear	DNK3259
	26	Lock Plate	DBK1106
	27	Inner Piece (A)	DNK3361
	28	Ball Pressure	DBK1107
	29	Inner Piece (A)	DNK3360
	30	Inner Table	DNK3635
	31	Sheet	DEC2000
	32	• • • • •	
	33	• • • • •	
	34	Base Plate FL	DNF1605
	35	Base Plate FR	DNF1606
	36	Base Plate RL	DNF1607
	37	Base Plate RR	DNF1608
	38	Sencer Stay	DNH2370
	39	• • • • •	
	40	• • • • •	
	41	• • • • •	
	42	• • • • •	
	43	D Guide L	DNK3272
	44	DG Base (R) Assy	DXB1615
	45	D guide Spring 3	DBH1340
	46	D Guide Sleeve	DNK3284
	47	D Guide Spring 1	DBH1339
	48	Bearing	DXB1617
	49	Outer Table	DNK3250
	50	Steel Ball (6)	VNX1002
	51	D Guide R	DNK3273
	52	DG Base (L) Assy	DXB1614
	53	• • • • •	
	54	• • • • •	
	55	Ball Catcher	DNK3285
	56	Carriage Base	DNK3445
	57	• • • • •	
	58	Worm Stay	RNK2054
	59	Washer	WC40S
	60	Worm Gear S	DLA1270
	61	S2M Pulley L (32)	DNK1390
	62	P2M Belt (L84)	DMS1036
	63	Motor Stay 2	DNH1417
	64	S2M Pulley S (18)	DNK3270
	65	Loading Motor Assy-S	DXX2337
⚠	66	DC Motor	DXM1037
	67	Capacitor (C1)	CFTLA224J50
	68	HS Support	DNH2201
	69	SW Worm Wheel	DNK1842
	70	Bearing	DXB1618
	71	H Cam Gear	DNK3382
	72	Flexible Cord (20P)	DDD1145
	73	SW Arm B	DNK3277
	74	SW Arm A	DNK3276
	75	SW Arm C	DNK3278
	76	Washer	WT26D047D050
	77	• • • • •	
	78	Cord Clamper	RNH-184
	79	Screw	BBZ30P060FMC
	80	Screw	IPZ20P050FMC
	81	Screw	BPZ26P060FZK
	82	• • • • •	
	83	• • • • •	
	84	Screw	BPZ30P080FCU
	85	Screw	BMZ26P040FMC
	86	• • • • •	
	87	Screw	PPZ26P080FMC
	88	Screw	IPZ30P160FMC
	89	Screw	PMA30P040FCU
	90	• • • • •	
	91	Carriage Base Assy-S	DXX2451
	92	Chuck Assy (Service)	DXX2348
	93	Worm Cover	DEC2062
	94	• • • • •	
	95	Screw	IPZ26P060FMC
	96	Connector Assy 2P	PF03PZ-D05
	97	Sheet 7000	DEC2373

2.1.14 HYPER SLOT SECTION

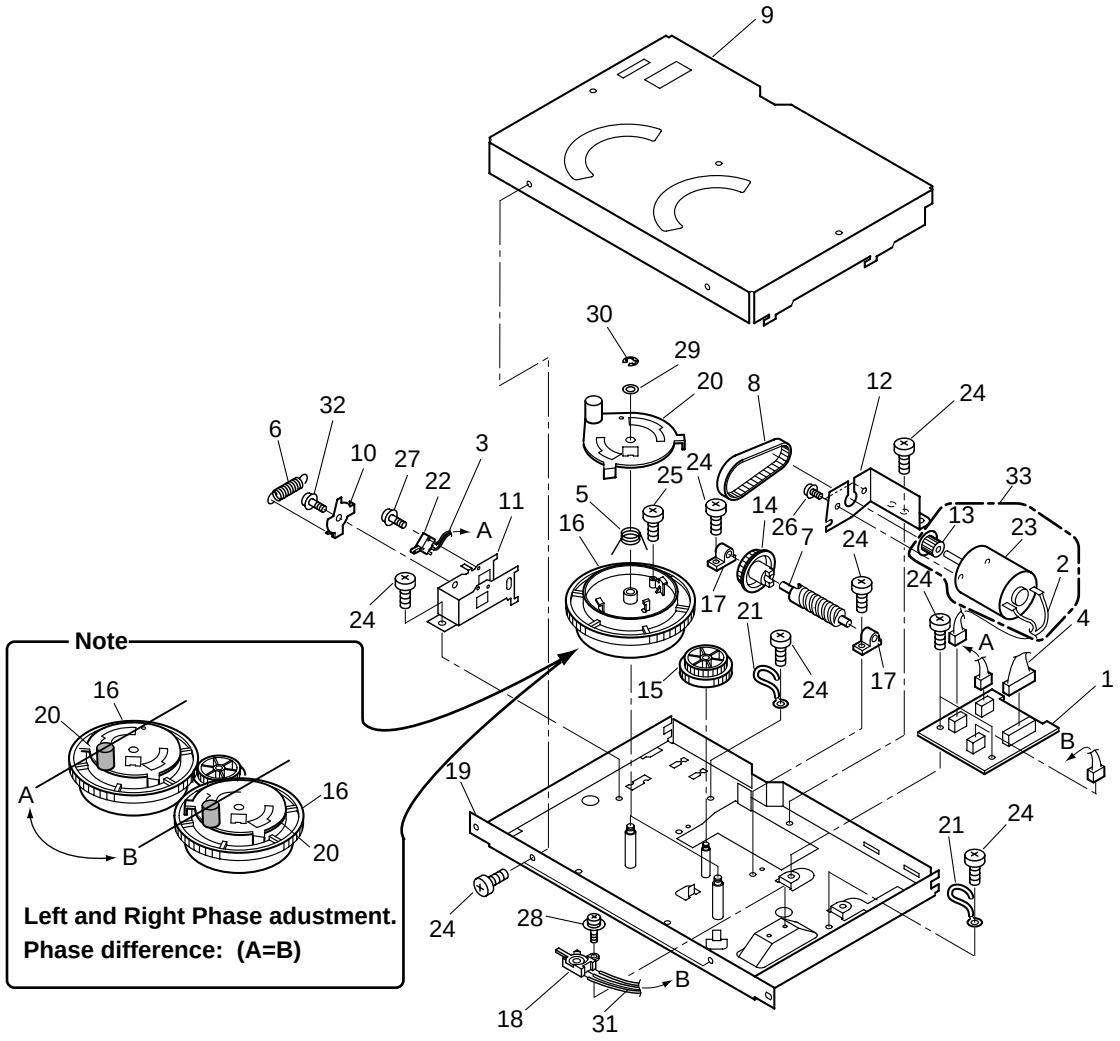

PARTS LIST

Mark	No.	Description	Part No.
	1	HMGB BOARD ASSY	DWX1986
	2	Connector Assy	PF02PZ-B05
	3	Connector Assy	PF02PZ4B15
	4	Connector assy	PF08PP4B15
	5	HP load Arm Spring	DBH1442
	6	HP Spring	DBH1443
	7	Gear S	DLA1664
	8	P2M Belt	DMS1036
	9	HP Upper Chassis	DNH2389
	10	HP Release	DNH2390
	11	HP Stay	DNH2391
	12	HP Motor Stay	DNH2392
	13	S2M Pulley S	DNK1389
	14	S2M Pulley L	DNK1390
	15	SW Worm Wheel	DNK1842
	16	HP Gear	DNK3655
	17	Worm Holder	DNK3673
	18	Lever Switch	DSK1003
	19	HP Under Chassis	DXB1705
	20	HP Arm Assy	DXB1706
	21	Cord Clamper	RNH-184
	22	Slide Switch	VSH1017
	23	Loading Motor	VXM1048
	24	Screw	BBZ30P060FMC
	25	Screw	BPZ30P080FCU
	26	Screw	PMA30P040FCU
	27	Screw	PMB20P080FMC
	28	Screw	PMH26P060FMC
	29	Washer	WA41D065D050
	30	E Ring	YE25FUC
	31	Connector Assy	DKP3483
	32	Screw	DBA1029
	33	Loading Motor Assy-S	DXX2452

2.2 20 DISC HYPER MAGAZINE (DRM-AH721)

2.2.1 PACKING SECTION

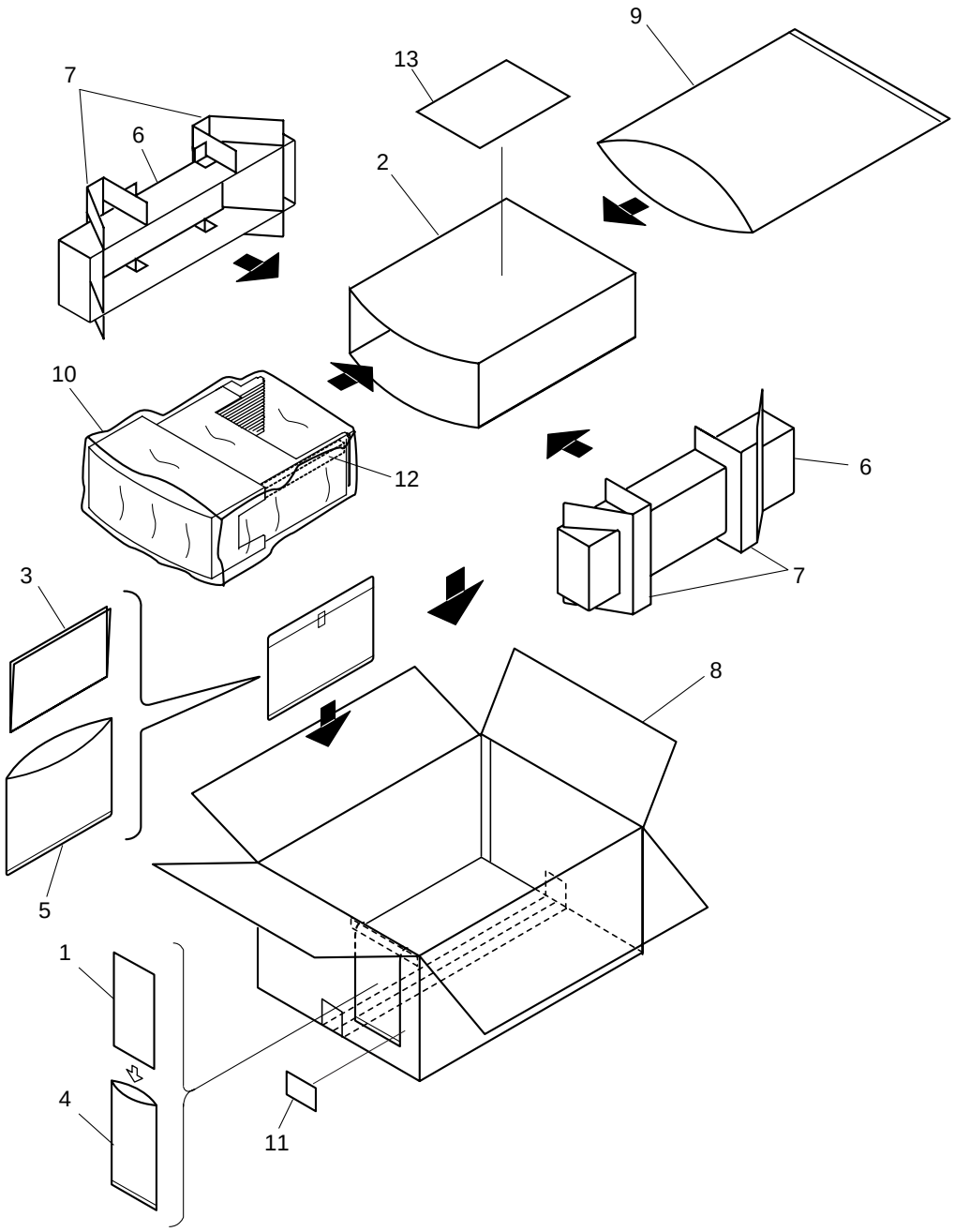

PARTS LIST

Mark	No.	Description	Part No.
NSP	1	Warranty Card	ARY1035
	2	HP Dust Cover	DEC2334
	3	Operating Instructions (English/ French/ German/ Japanese)	DRC1110
NSP	4	Polyethylene Bag (100x230x0.018)	Z21-010
	5	Polyethylene Bag (230x340x0.03)	Z21-038
	6	Pad	DHA1435
	7	Pad B	DHA1452
	8	Packing Case	DHG1919
	9	Bag	DHL1052
	10	Mirror Mat	DHL1112
NSP	11	Lavel	VRW1629
	12	HP Spacer	DHA1461
	13	HP Caution	DRY1184

2.2.2 EXTERIOR SECTION

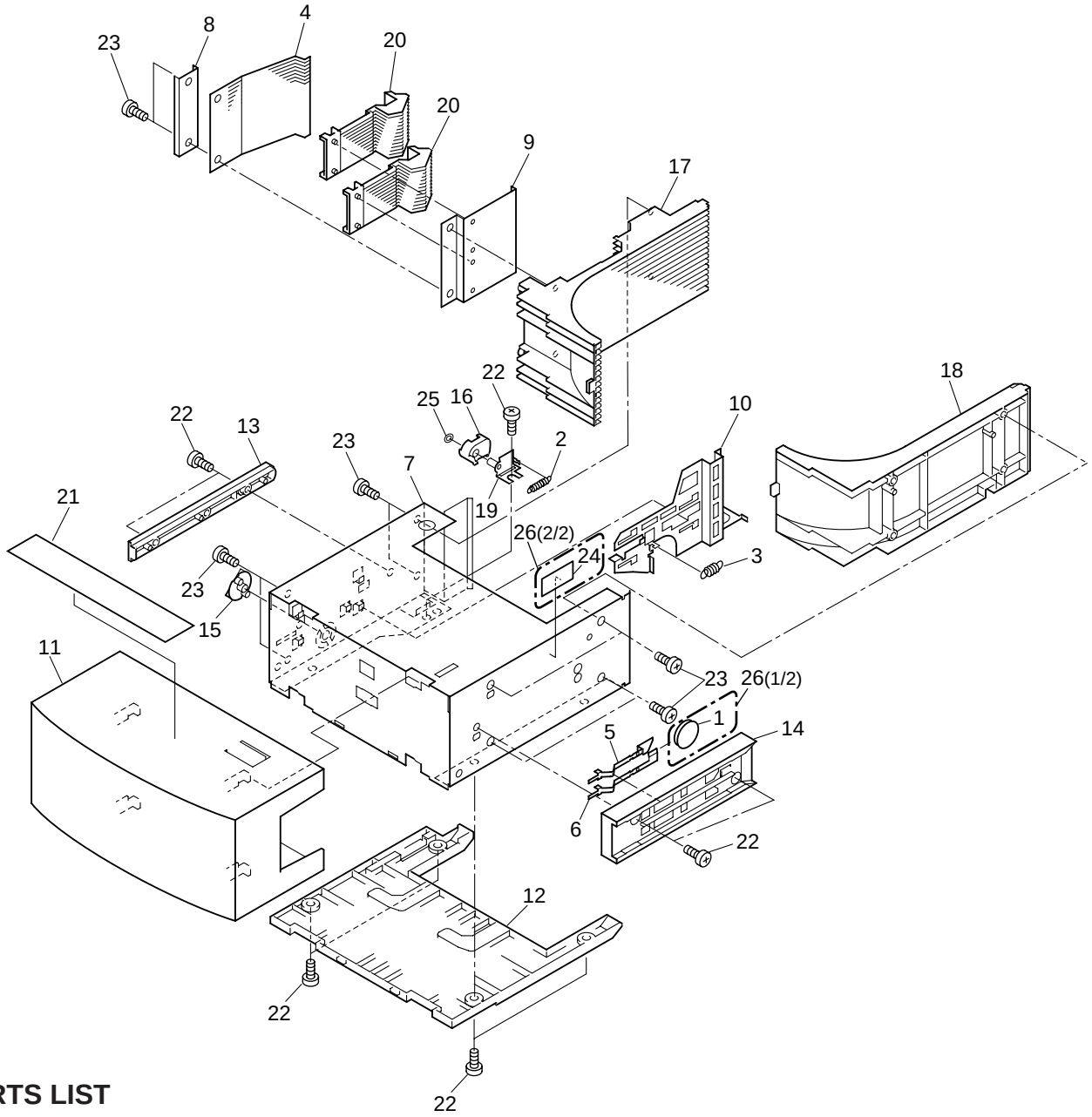

PARTS LIST

Mark	No.	Description	Part No.	Mark	No.	Description	Part No.
	1	Touch Memory (256bit)	DS1971-F3		14	Magazine Rail R	DNK3658
	2	HP Togle Arm SP	DBH1444		15	DH Release Knob	DNK3659
	3	HPDH Lock Spring	DBH1448		16	HP Toggle Arm	DNK3668
	4	HP Holder Stopper	DBK1170		17	HP Disc Rack L	DNK3671
	5	Touch Spring A	DBK1171		18	HP Disc Rack R	DNK3672
	6	Touch Spring B	DBK1172		19	HP Toggle Stay Assy	DXB1704
	7	HP Rack Base	DNH2393		20	Disc Holder W	RNK2107
	8	HP Spring Plate	DNH2394		21	Label	DRW1951
	9	HP Holder Plate	DNH2395		22	Screw	BBZ30P080FZK
	10	HPDH Lock Plate	DNH2396		23	Screw	BPZ30P080FCU
	11	HP Panel	DNK3654	NSP	24	Label	VRW1629
	12	HP Base	DNK3656		25	Washer	WT21D040D050
	13	Magazine Rail L	DNK3657		26	AH721 Touch Memory Assy-S	DXX2456

2.3 50 DISC MAGAZINE (DRM-AF751)

2.3.1 PACKING SECTION

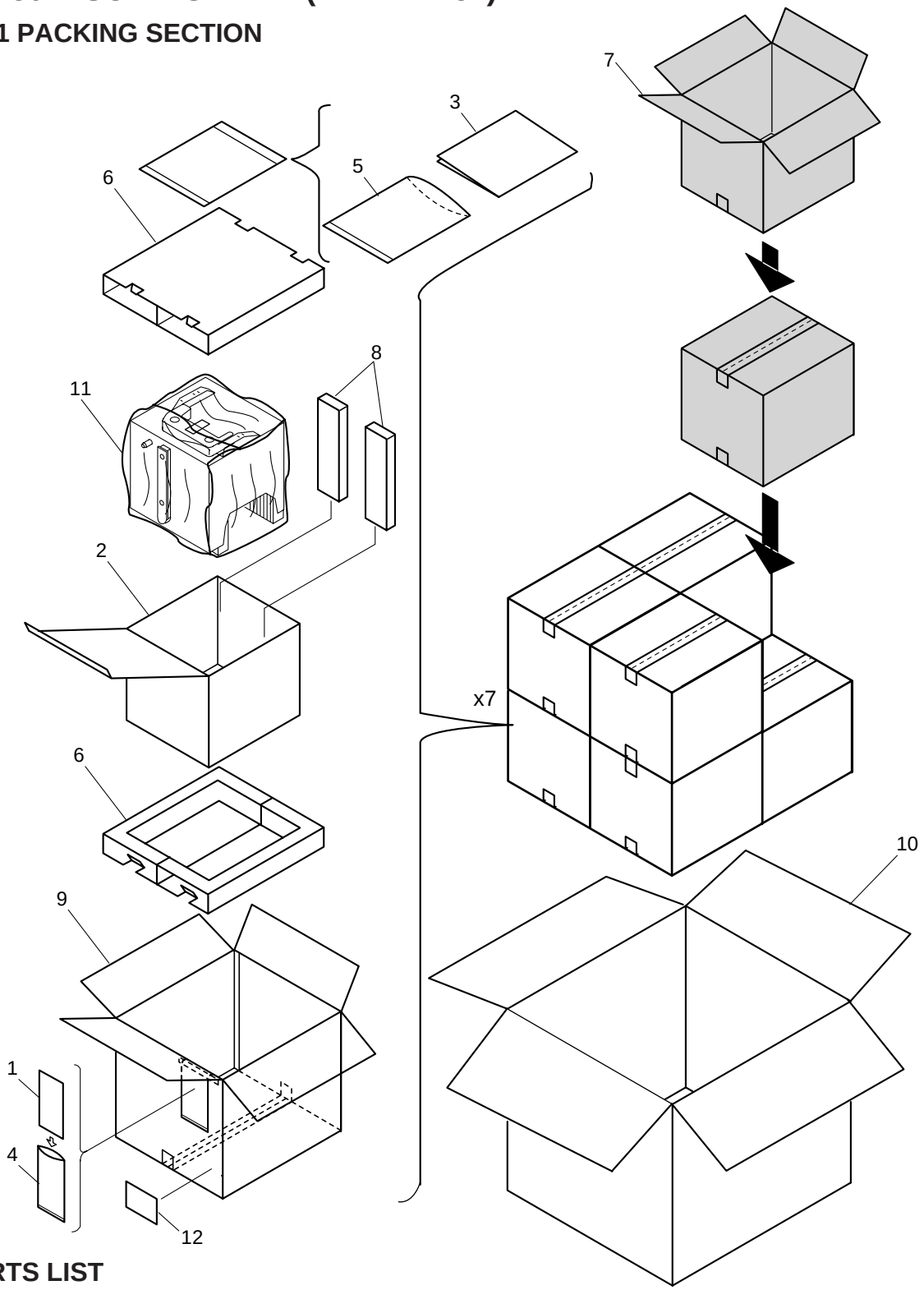

PARTS LIST

Mark	No.	Description	Part No.
NSP	1	Warranty Card	ARY1035
	2	Magazine Dust Cover	DEC2333
	3	Operating Instructions (English/ French/ German/ Japanese)	DRC1107
NSP	4	Polyethylene Bag (100x230x0.018)	Z21-010
	5	Polyethylene Bag (230x340x0.03)	Z21-038
	6	Pad	DHA1433
	7	Rack Master Spacer	DHC1051
	8	Dust Cover Spacer	DHC1052
	9	Packing Case	DHG1931
	10	Rack Master Carton	DHG1941
	11	Mirror Mat	DHL1112
NSP	12	Lavel	VRW1629

2.3.2 EXTERIOR SECTION

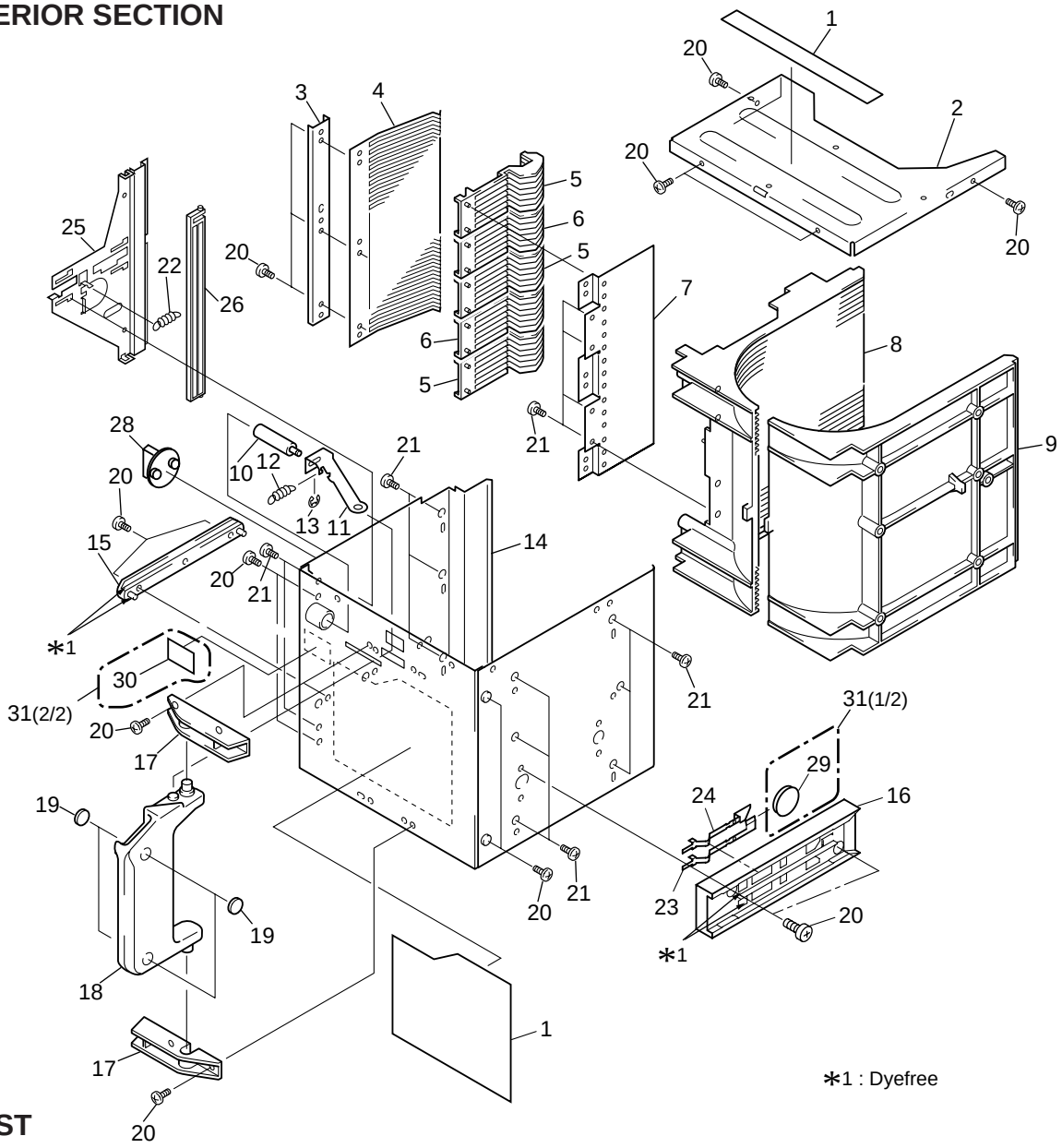

*1 : Dyefree

PARTS LIST

Mark	No.	Description	Part No.
	1	Magazine Label	DRW1949
	2	Rack Base (B)	DNH2163
	3	Spring Holder	DNH2164
	4	Holder Stopper	RBK1049
	5	Disc Holder W	RNK2107
	6	Disc Holder R	RNK2108
	7	Holder Plate	RNE1616
	8	Disc Rack (L)	DNK3240
	9	Disc Rack (R)	DNK3241
	10	Catch Pin	DLA1887
	11	Catch Plate	DNH2167
	12	Catch Plate Spring	DBH1349
	13	E Ring	YE20FUC
	14	Rack Base (N) Assy	DXB1707
	15	Magazine Rail L	DNK3657
	16	Magazine Rail R	DNK3658
	17	Grip Holder	DNK3247
	18	Grip (N)	DNK3704
	19	LD Pad (Large)	VEC1472
	20	Screw	BBZ30P080FZK
	21	Screw	BPZ30P080FCU
	22	DH Lock Spring	DBH1445
	23	Touch Spring A	DBK1171
	24	Touch Spring B	DBK1172
	25	DH Lock Plate	DNH2398
	26	DH Lock Saport	DNK3670
	27	• • • • •	
	28	DH Relese Knob	DNK3659
	29	Touch Memory (256bit)	DS1971-F3
NSP	30	Label	VRW1629
	31	AF751 Touch Memory Assy-S	DXX2454

2.4 50 DISC MAGAZINE LOCK TYPE (DRM-AL751)

2.4.1 PACKING SECTION

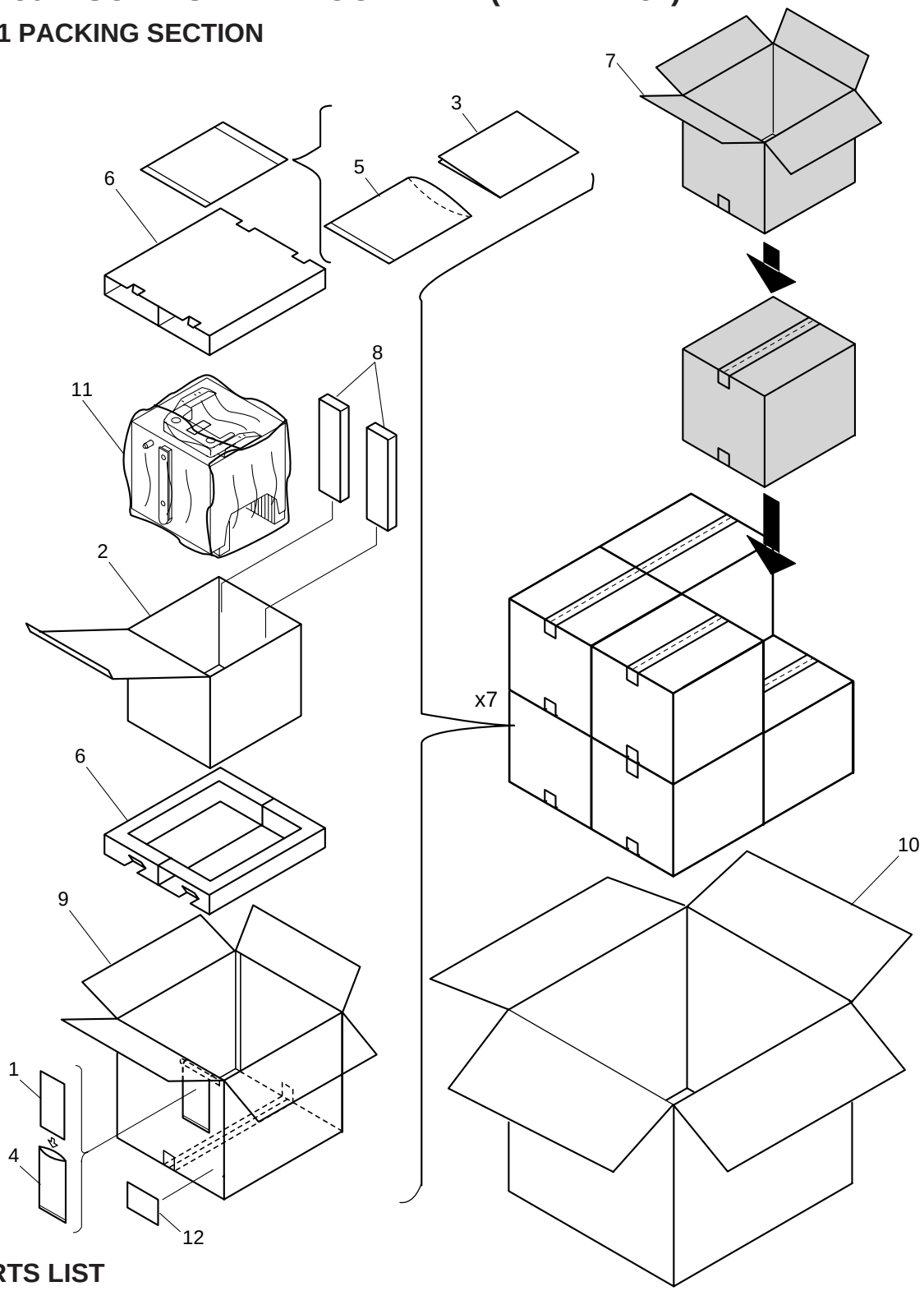

PARTS LIST

Mark	No.	Description	Part No.
NSP	1	Warranty Card	ARY1035
	2	Magazine Dust Cover	DEC2333
	3	Operating Instructions (English/ French/ German/ Japanese)	DRC1115
NSP	4	Polyethylene Bag (100x230x0.018)	Z21-010
	5	Polyethylene Bag (230x340x0.03)	Z21-038
	6	Pad	DHA1433
	7	Rack Master Spacer	DHC1051
	8	Dust Cover Spacer	DHC1052
	9	Packing Case	DHG1951
	10	Rack Master Carton	DHG1952
	11	Mirror Mat	DHL1112
NSP	12	Lavel	VRW1629

2.4.2 EXTERIOR SECTION

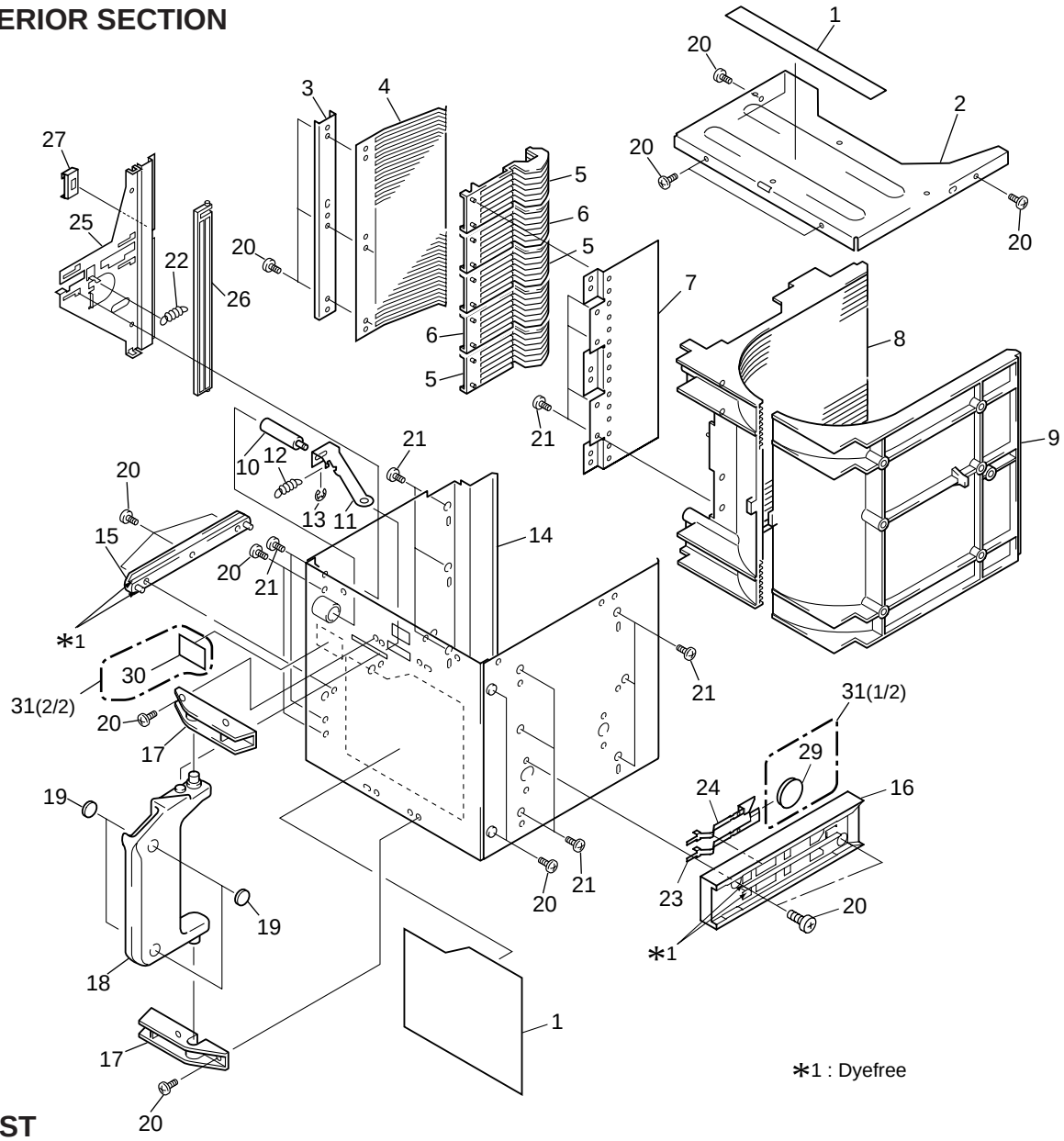

PARTS LIST

Mark	No.	Description	Part No.
	1	Magazine Label (L)	DRW1966
	2	Rack Base (B)	DNH2163
	3	Spring Holder	DNH2164
	4	Holder Stopper	RBK1049
	5	Disc Holder W	RNK2107
	6	Disc Holder R	RNK2108
	7	Holder Plate	RNE1616
	8	Disc Rack (L)	DNK3240
	9	Disc Rack (R)	DNK3241
	10	Catch Pin	DLA1887
	11	Catch Plate	DNH2167
	12	Catch Plate Spring	DBH1349
	13	E Ring	YE20FUC
	14	Rack Base (A) Assy	DXB1707
	15	Magazine Rail L	DNK3657
	16	Magazine Rail R	DNK3658
	17	Grip Holder	DNK3247
	18	Grip (L)	DNK3705
	19	LD Pad (Large)	VEC1472
	20	Screw	BBZ30P080FZK
	21	Screw	BPZ30P080FCU
	22	DH Lock Spring	DBH1445
	23	Touch Spring A	DBK1171
	24	Touch Spring B	DBK1172
	25	DH Lock Plate	DNH2398
	26	DH Lock Saport	DNK3670
	27	W Lock Lever	DNK3669
	28	• • • • •	
	29	Touch Memory (256bit)	DS1971-F3
NSP	30	Label	VRW1629
	31	AL751 Touch Memory Assy-S	DXX2455

2.5 POWER SUPPLY (DRM-PW701)

2.5.1 PACKING SECTION

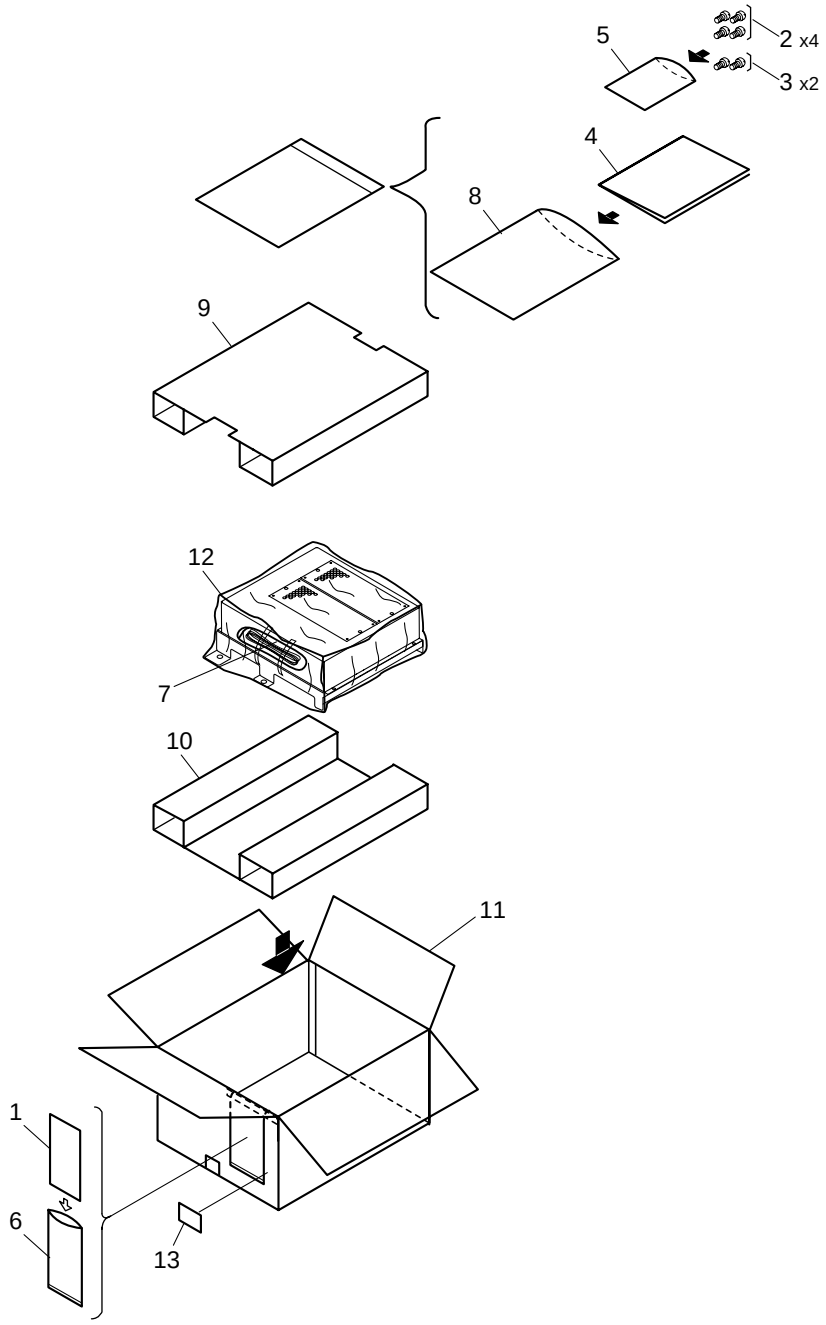

PARTS LIST

Mark	No.	Description	Part No.
NSP	1	Warranty Card	ARY1035
	2	Screw	BBZ30P060FMC
	3	Screw	PMB40P080FMC
	4	Operating Instructions (English/ French/ German/ Japanese)	DRC1109
NSP	5	Polyethylene Bag (50x70x0.03)	Z21-002
NSP	6	Polyethylene Bag (100x230x0.018)	Z21-010
	7	Polyethylene Bag (165x200x0.03)	Z21-014
	8	Polyethylene Bag (230x340x0.03)	Z21-038
	9	Pad	DHA1441
	10	Pad	DHA1460
	11	Packing Case	DHG1945
	12	Sheet	DHL-125
NSP	13	Lavel	VRW1629

2.5.2 EXTERIOR SECTION

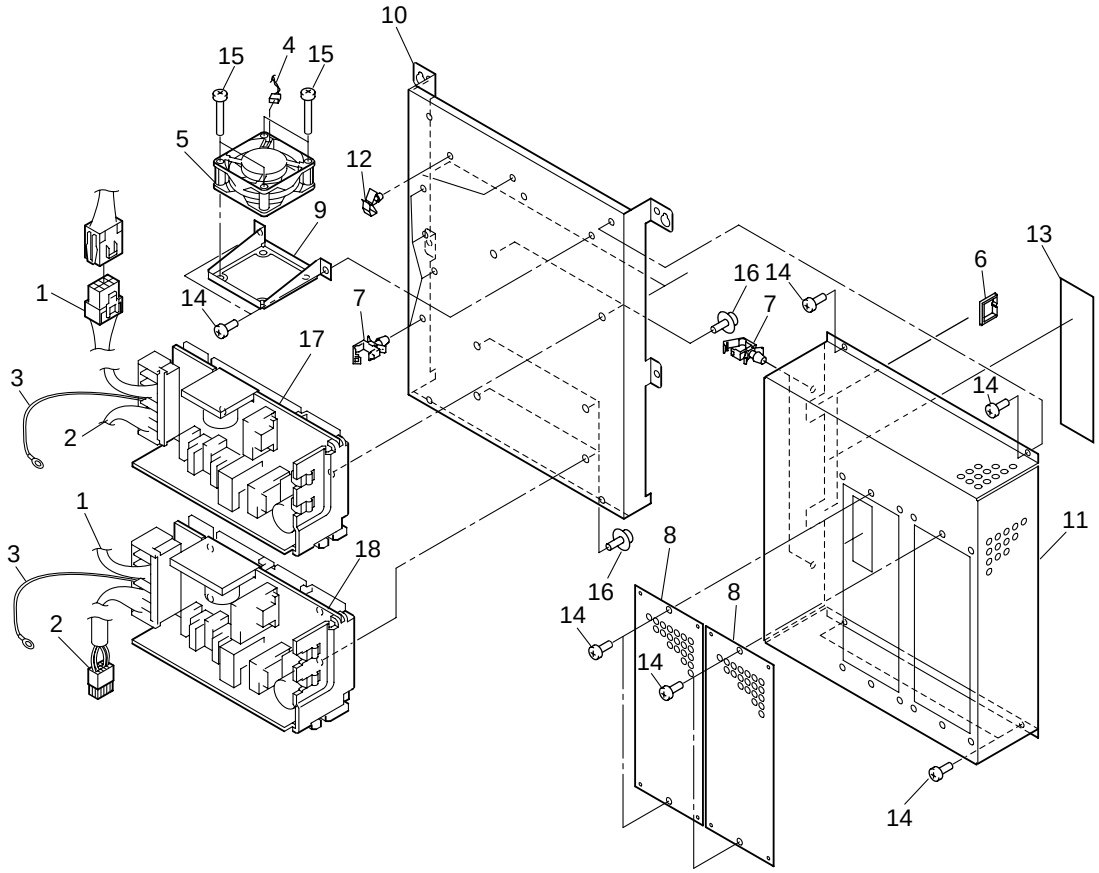

PARTS LIST

Mark	No.	Description	Part No.
	1	Connector Assy	DKP3447
	2	Connector Assy	DKP3448
	3	Connector Assy	DKP3463
	4	Connector Assy	PG03MM-F40
	5	Fan Motor	DXM1127
NSP	6	Edge Guard A	DEC1143
	7	Locking Wire Saddle	DEC1717
	8	Vent Plate	DNF1616
	9	Fan Bracket S	DNF1619
	10	PW Plate B	DNH2380
	11	PW Cover	DNH2381
NSP	12	Mini Clamp	VEC1597
	13	65 Label	ARW7050
	14	Screw	BBZ30P060FMC
	15	Screw	PMB40P350FMC
	16	Screw	PMB40P080FMC
⚠	17	SW Power Supply	DWR1324
⚠	18	SW Power Supply	DWR1325

3. BLOCKDIAGRAM AND SCHEMATIC DIAGRAM

3.1 BLOCK DIAGRAME

● **POWER ROUTE**

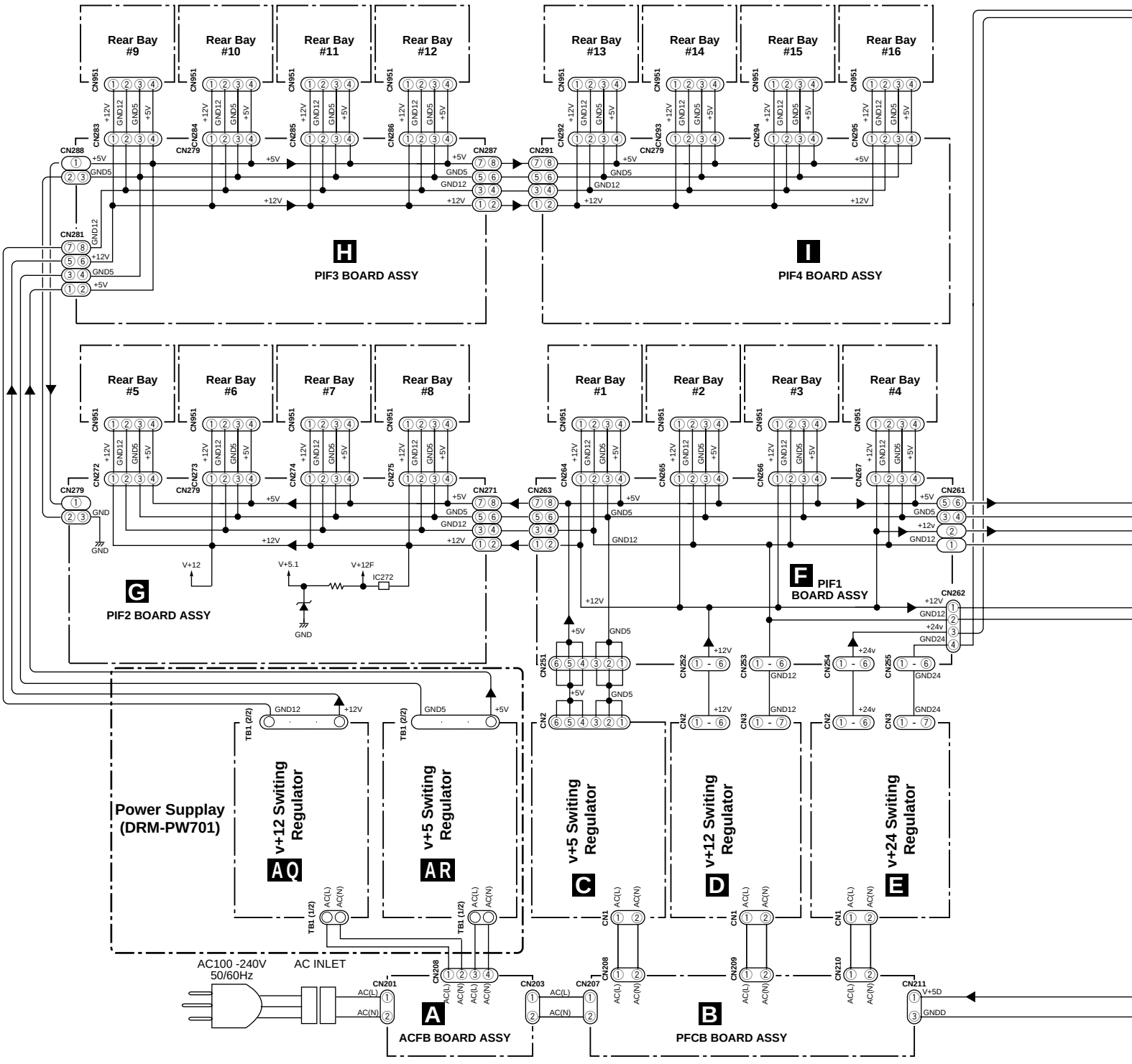

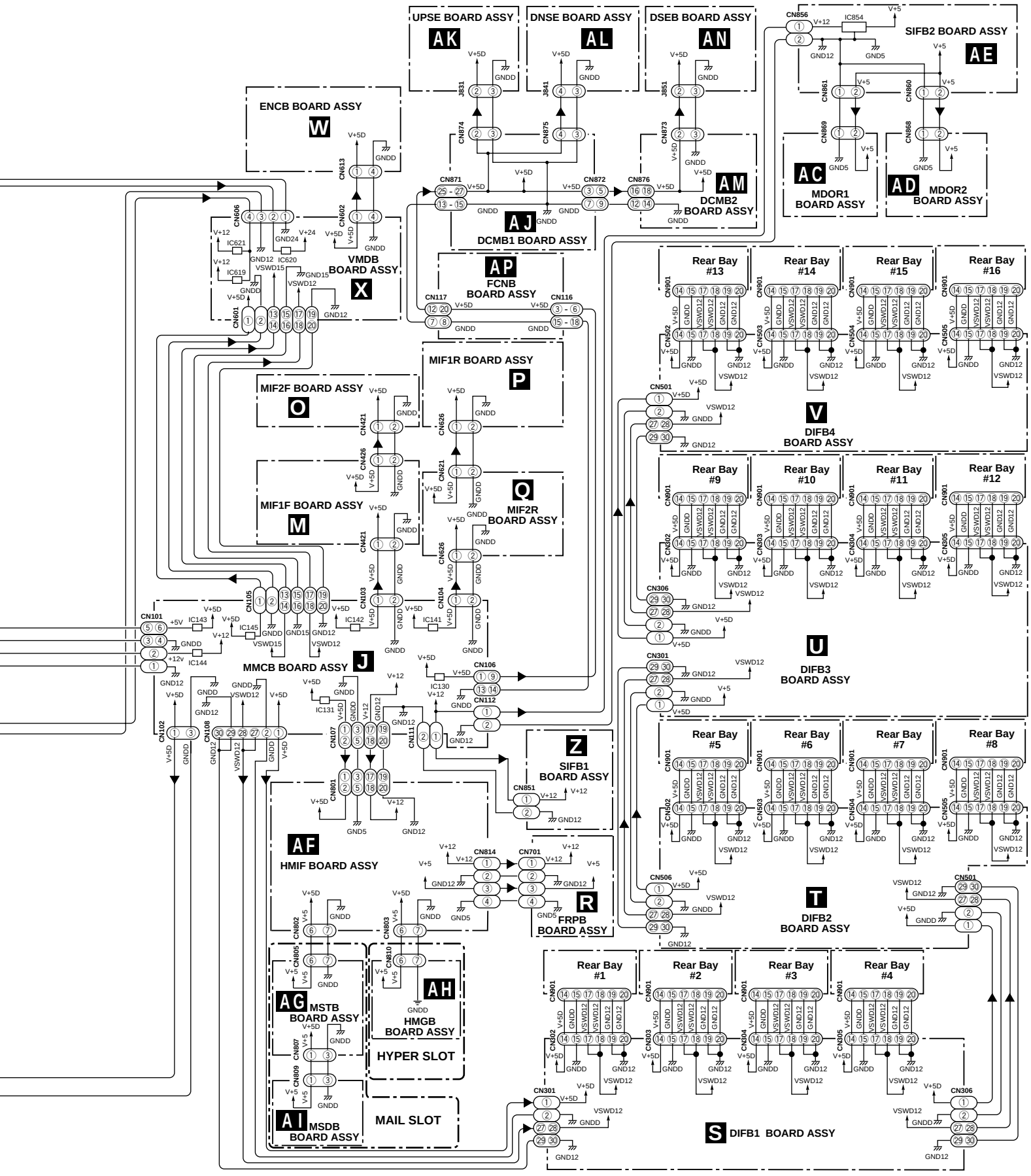
UPSE BOARD ASSY
AK
DNSE BOARD ASSY
AL
DSEB BOARD ASSY
AN
SIFB2 BOARD ASSY
AE
ENCB BOARD ASSY
W
DCMB2 BOARD ASSY
AM
DCMB1 BOARD ASSY
AJ
MDOR1 BOARD ASSY
AC
MDOR2 BOARD ASSY
AD
VMDB BOARD ASSY
X
FCNB BOARD ASSY
AP
MIF1R BOARD ASSY
P
MIF2F BOARD ASSY
O
MIF2R BOARD ASSY
Q
MIF1F BOARD ASSY
M
MMCB BOARD ASSY
J
DIFB4 BOARD ASSY
V
DIFB3 BOARD ASSY
U
DIFB2 BOARD ASSY
T
DIFB1 BOARD ASSY
S
SIFB1 BOARD ASSY
Z
HMIF BOARD ASSY
AF
FRPB BOARD ASSY
R
MSTB BOARD ASSY
AG
HMGB BOARD ASSY
AH
MSDB BOARD ASSY
AI
HYPER SLOT
MAIL SLOT
Rear Bay #1
Rear Bay #2
Rear Bay #3
Rear Bay #4
Rear Bay #5
Rear Bay #6
Rear Bay #7
Rear Bay #8
Rear Bay #9
Rear Bay #10
Rear Bay #11
Rear Bay #12
Rear Bay #13
Rear Bay #14
Rear Bay #15
Rear Bay #16

3.2 OVERALL SCHEMATIC DIAGRAM (1/3)

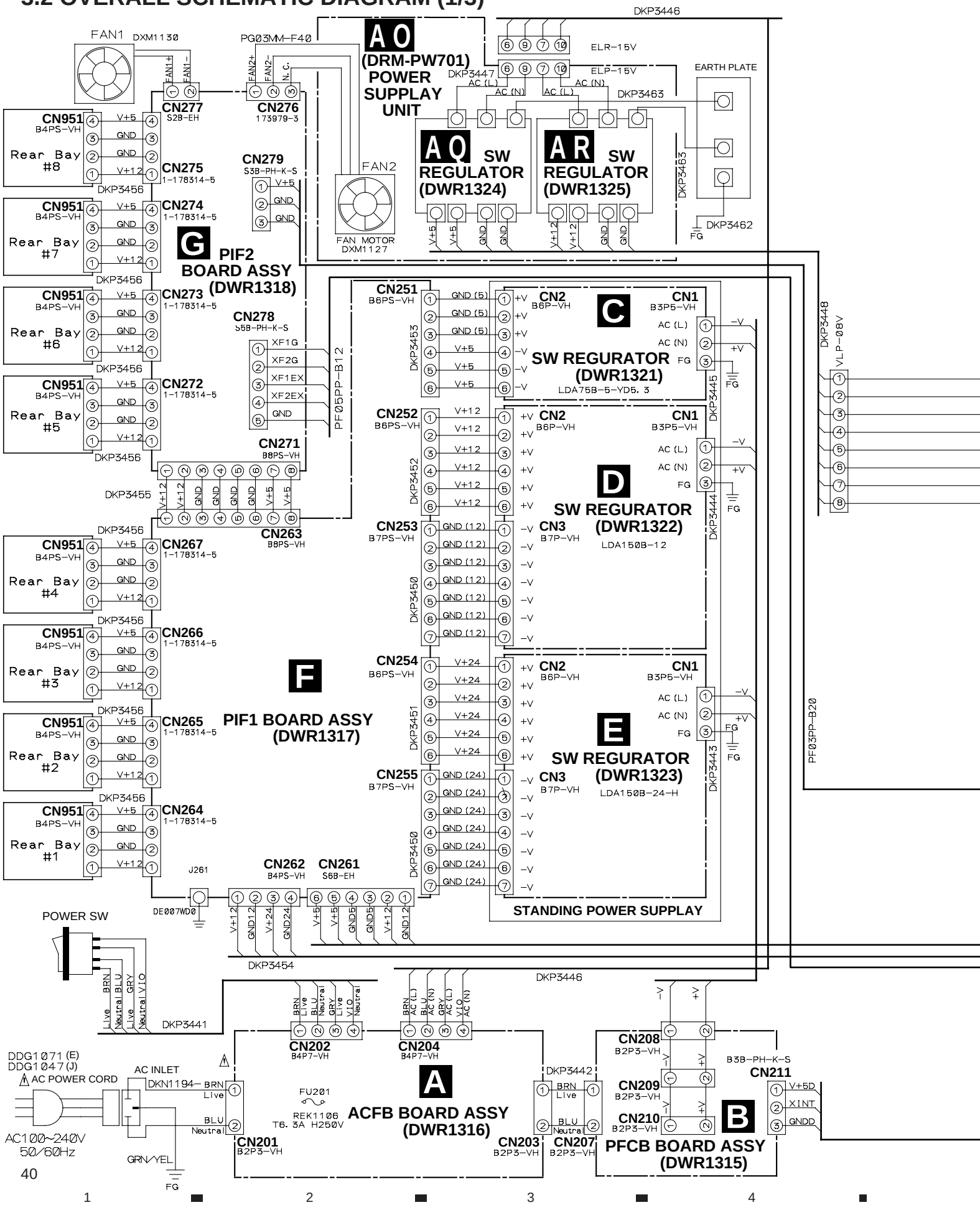

Note : When ordering service parts, be sure to refer to "EXPLODED VIEWS and PARTS LIST" or "PCB PARTS LIST".

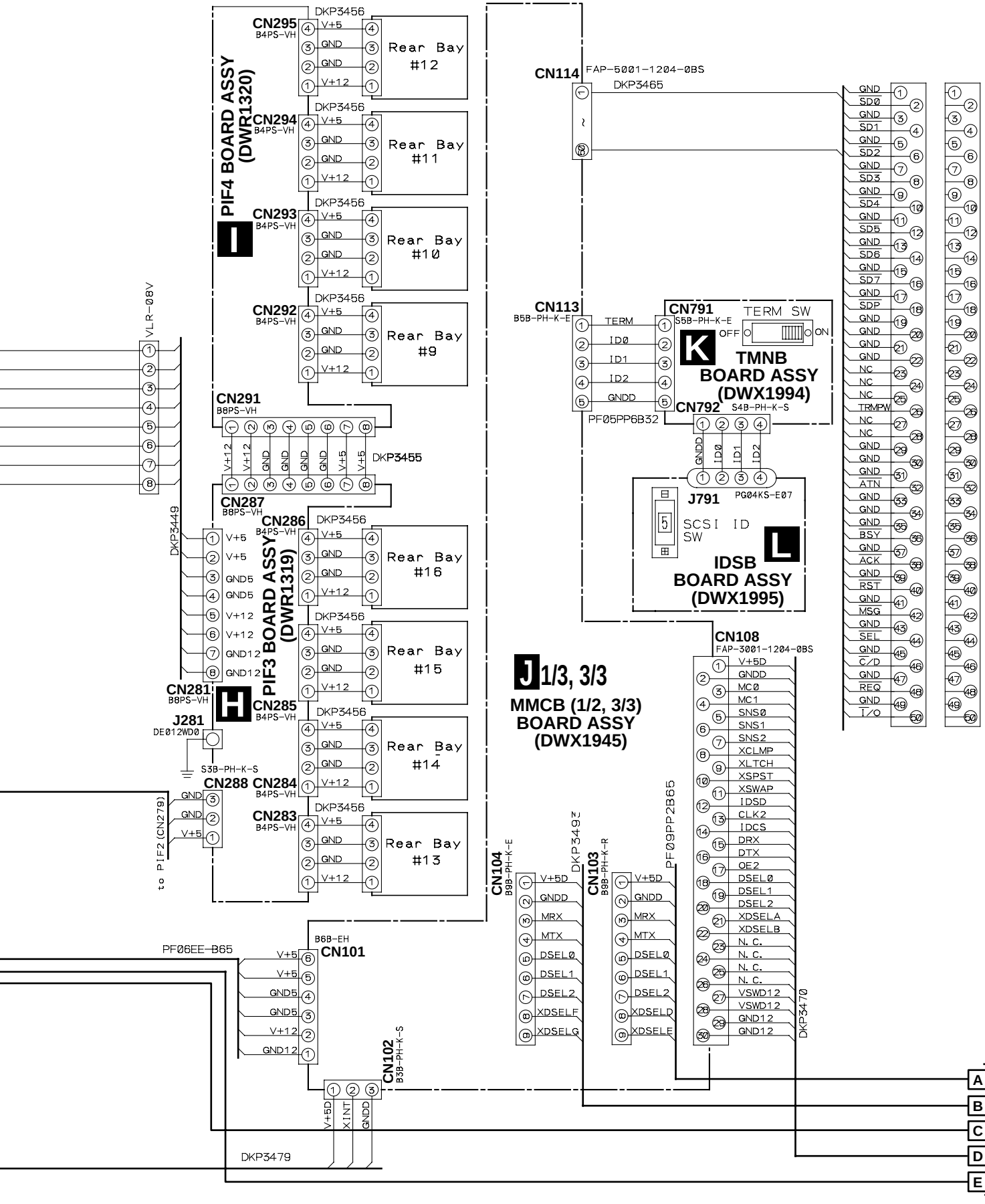

3.3 OVERALL SCHEMATIC DIAGRAM (2/3)

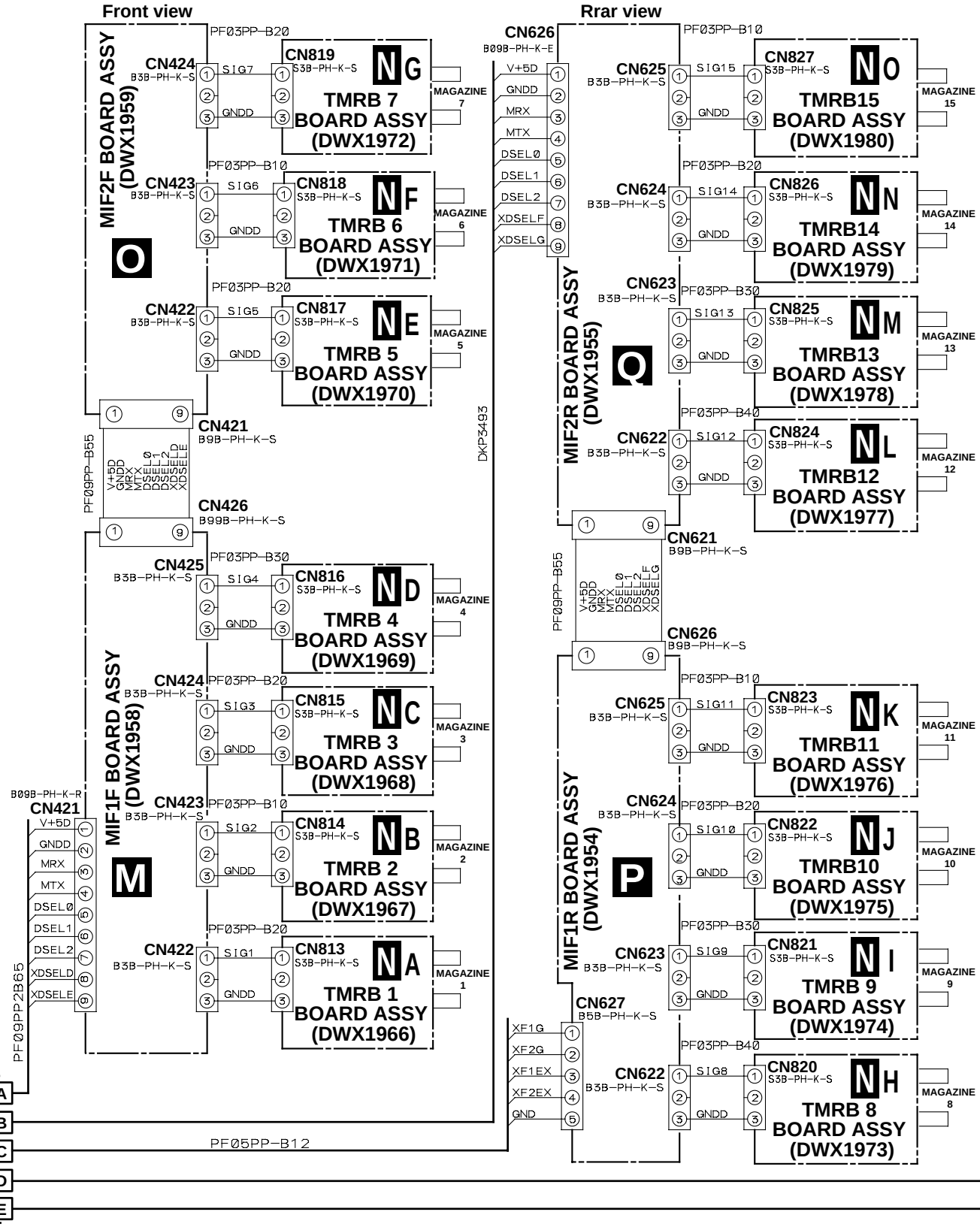

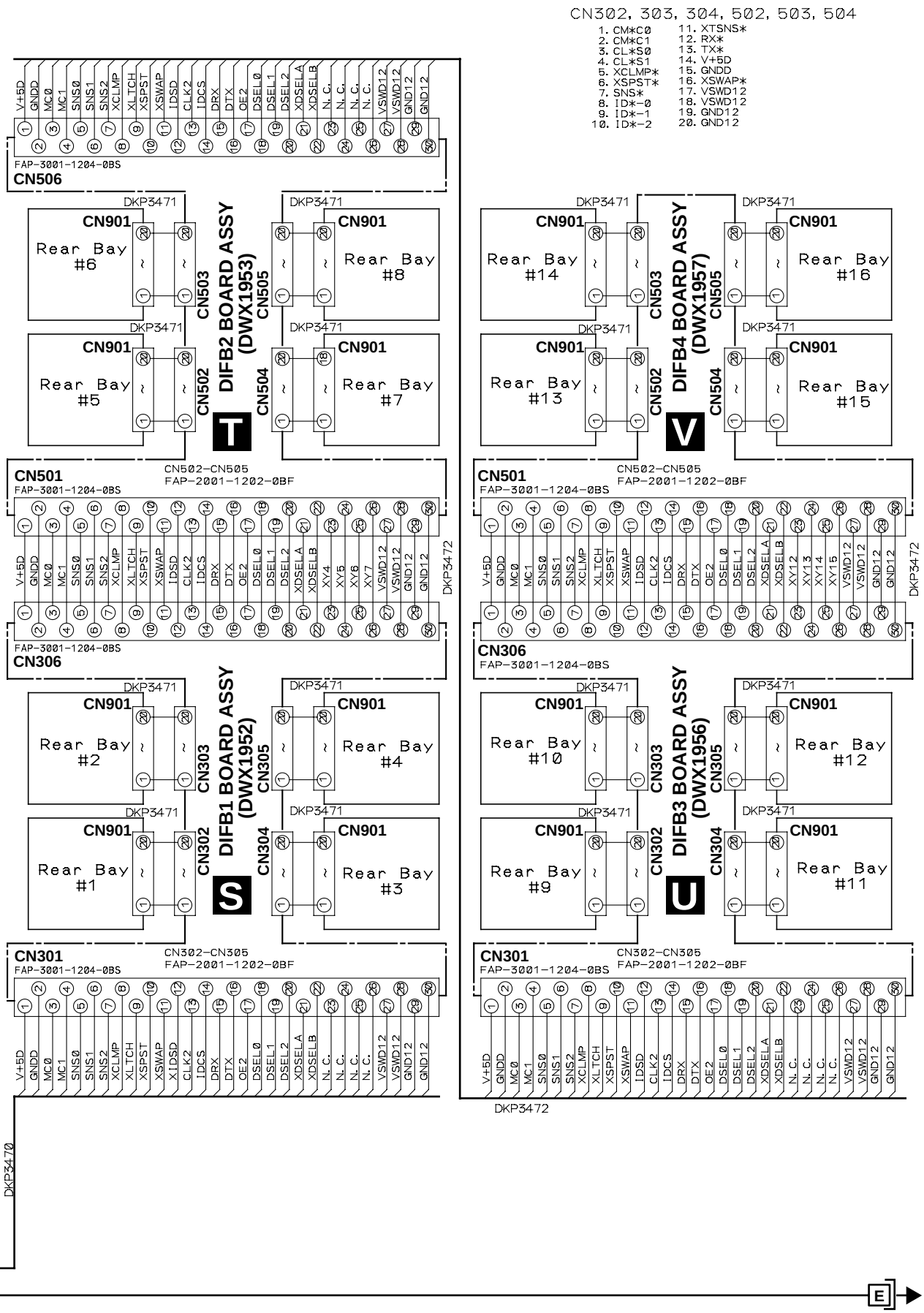
CN302, 303, 304, 502, 503, 504
1. CM*C0
2. CM*C1
3. CL*S0
4. CL*S1
5. XCLMP*
6. XSPST*
7. SNS*
8. ID*-0
9. ID*-1
10. ID*-2
11. XTSNS*
12. RX*
13. TX*
14. V+5D
15. GNDD
16. XSWAP*
17. VSWD12
18. VSWD12
19. GND12
20. GND12
CN506
FAP-3001-1204-0BS
DIFB2 BOARD ASSY (DWX1953)
DIFB4 BOARD ASSY (DWX1957)
DIFB1 BOARD ASSY (DWX1952)
DIFB3 BOARD ASSY (DWX1956)
CN501
CN502-CN505
FAP-2001-1202-0BF
CN306
CN301
CN302-CN305
DKP3471
DKP3472
DKP3470
TO. OVERALL SCHEMATIC DIAGRAM (3/3)

3.4 OVERALL SCHEMATIC DIAGRAM (3/3)

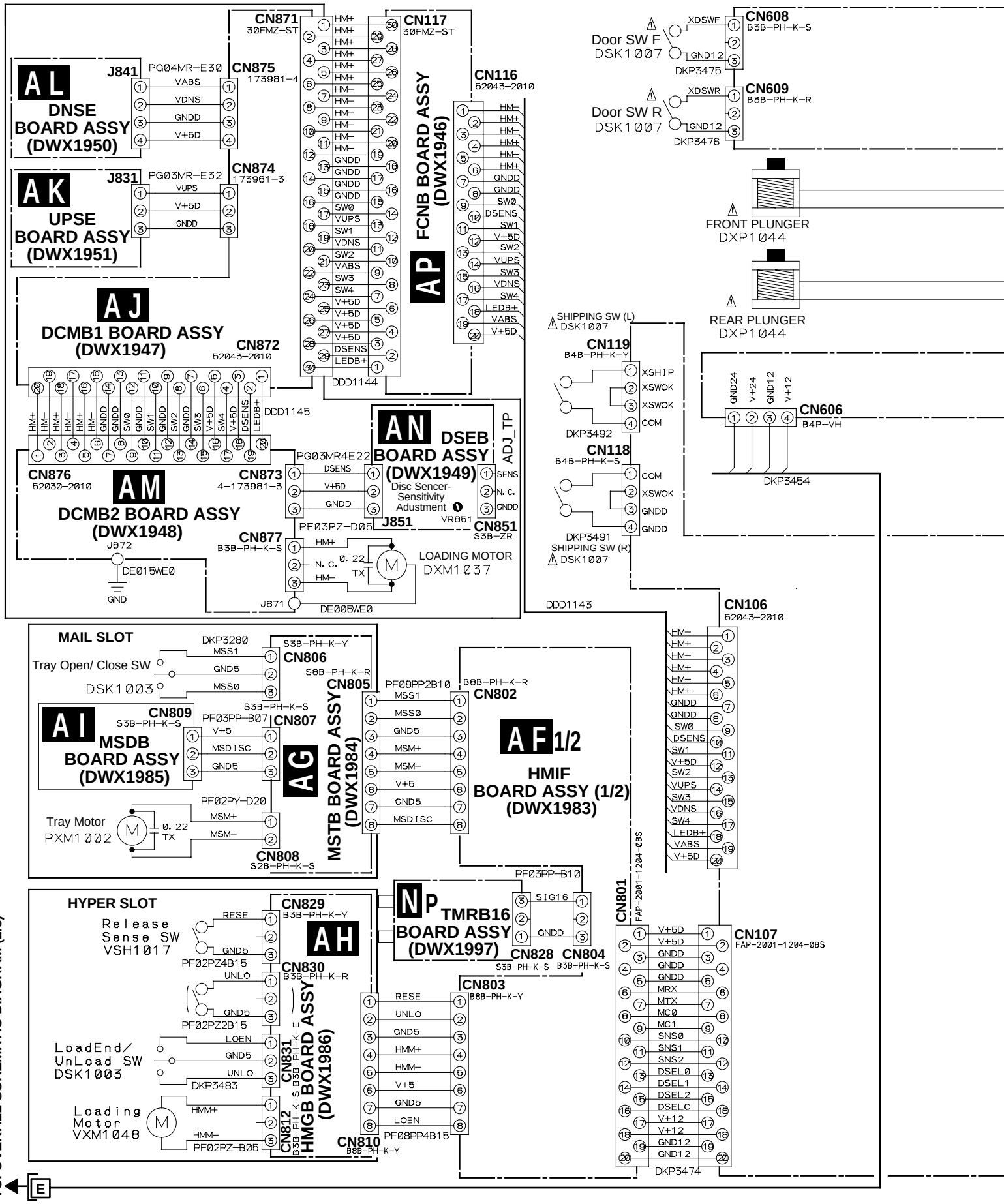

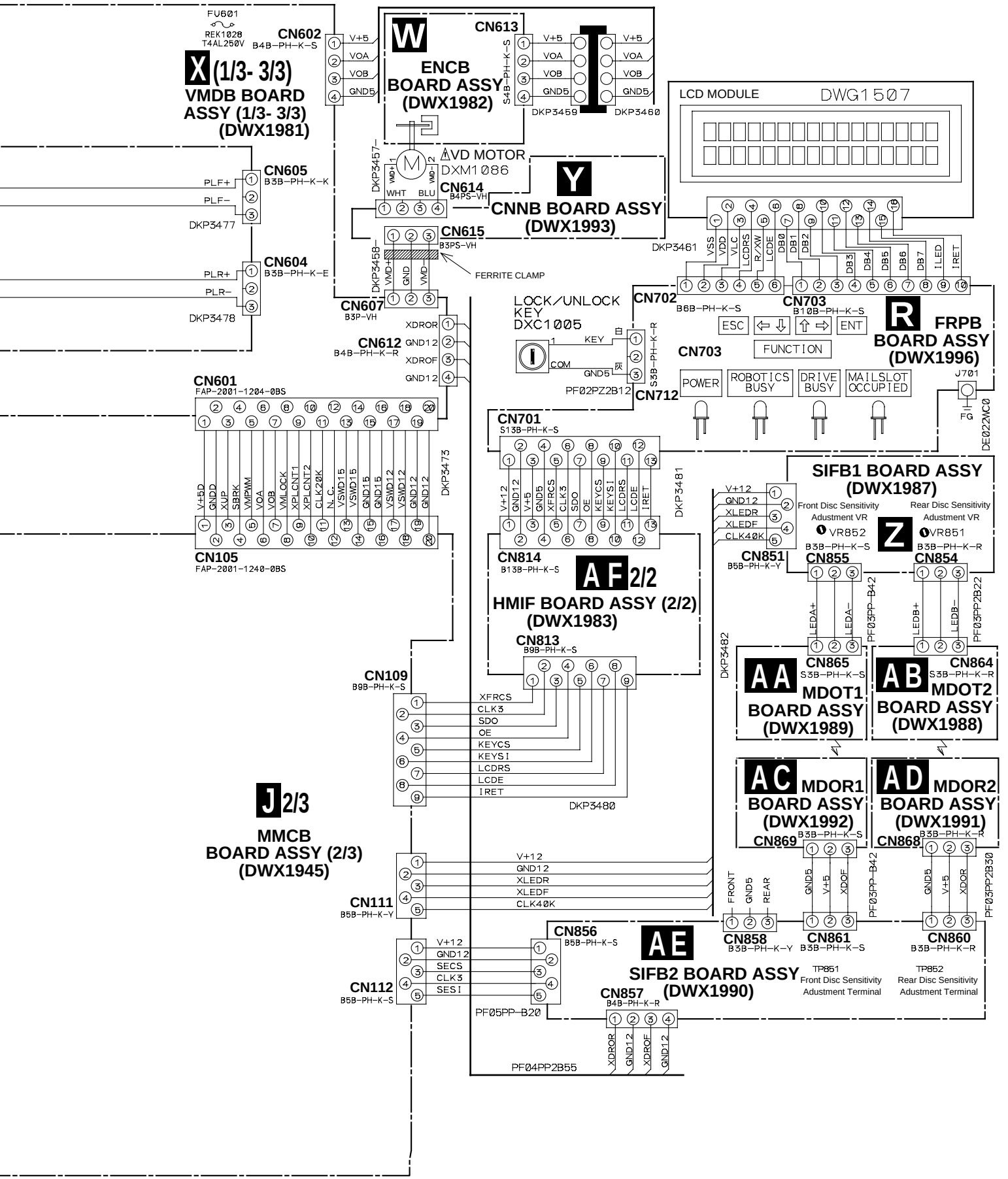
FU601
REK1028
T4AL250V
CN602
B4B-PH-K-S
V+5
VOA
VOB
GND5
W
ENCB BOARD ASSY (DWX1982)
CN613
S4B-PH-K-S
DKP3459
DKP3460
X (1/3- 3/3)
VMDB BOARD ASSY (1/3- 3/3) (DWX1981)
LCD MODULE
DWG1507
VD MOTOR
DXM1086
DKP3457
VMD+1
VMD-2
WHT
BLU
CN614
B4PS-VH
Y
CNNB BOARD ASSY (DWX1993)
CN615
B3PS-VH
DKP3458
VMD+1
GND
VMD-2
FERRITE CLAMP
DKP3461
VSS
VDD
VLC
LCDRS
R/W
LCDE
DB0
DB1
DB2
DB3
DB4
DB5
DB6
DB7
ILED
IRET
CN605
B3B-PH-K-K
PLF+
PLF-
DKP3477
CN604
B3B-PH-K-E
PLR+
PLR-
DKP3478
CN607
B3P-VH
CN612
B4B-PH-K-R
XDROR
GND12
XDROF
GND12
LOCK/UNLOCK KEY
DXC1005
KEY
COM
GND5
S3B-PH-K-R
PF02PZ2B12
CN712
CN702
B6B-PH-K-S
CN703
B10B-PH-K-S
ESC
ENT
FUNCTION
R
FRPB BOARD ASSY (DWX1996)
POWER
ROBOTICS BUSY
DRIVE BUSY
MAILSLOT OCCUPIED
J701
FG
DE022WC0
CN601
FAP-2001-1204-0BS
V+5D
GNDD
XUP
SBRK
VMPWM
VOA
VOB
VMLOCK
XPLCNT1
XPLCNT2
CLK20K
N.C.
VSWD15
VSWD15
GND15
GND15
VSWD12
VSWD12
GND12
GND12
DKP3473
CN105
FAP-2001-1240-0BS
CN701
S13B-PH-K-S
V+12
GND12
V+5
GND5
XFRCS
CLK3
SDO
OE
KEYCS
KEYSI
LCDRS
LCDE
IRET
DKP3481
CN814
B13B-PH-K-S
AF 2/2
HMIF BOARD ASSY (2/2) (DWX1983)
CN813
B9B-PH-K-S
SIFB1 BOARD ASSY (DWX1987)
V+12
GND12
XLEDR
XLEDF
CLK40K
Front Disc Sensitivity Adustment VR
VR852
Rear Disc Sensitivity Adustment VR
VR851
Z
B3B-PH-K-S
B3B-PH-K-R
CN851
B5B-PH-K-Y
CN855
CN854
LEDA+
LEDA-
LEDB+
LEDB-
PF03PP-B42
PF03PP2B22
DKP3482
AA
MDOT1 BOARD ASSY (DWX1989)
CN865
S3B-PH-K-S
AB
MDOT2 BOARD ASSY (DWX1988)
CN864
S3B-PH-K-R
CN109
B9B-PH-K-S
XFRCS
CLK3
SDO
OE
KEYCS
KEYSI
LCDRS
LCDE
IRET
DKP3480
J 2/3
MMCB BOARD ASSY (2/3) (DWX1945)
AC
MDOR1 BOARD ASSY (DWX1992)
AD
MDOR2 BOARD ASSY (DWX1991)
CN869
CN868
B3B-PH-K-S
B3B-PH-K-R
V+12
GND12
XLEDR
XLEDF
CLK40K
CN111
B5B-PH-K-Y
FRONT
GND5
REAR
GND5
V+5
XDOF
GND5
V+5
XDOR
PF03PP-B42
PF03PP2B30
CN858
B3B-PH-K-Y
CN861
B3B-PH-K-S
CN860
B3B-PH-K-R
CN856
B5B-PH-K-S
V+12
GND12
SECS
CLK3
SESI
CN112
B5B-PH-K-S
PF05PP-B20
AE
SIFB2 BOARD ASSY (DWX1990)
TP851
Front Disc Sensitivity Adustment Terminal
TP852
Rear Disc Sensitivity Adustment Terminal
CN857
B4B-PH-K-R
XDROR
GND12
XDROF
GND12
PF04PP2B55

3.5 ACFB and PFCB BOARD ASSYS

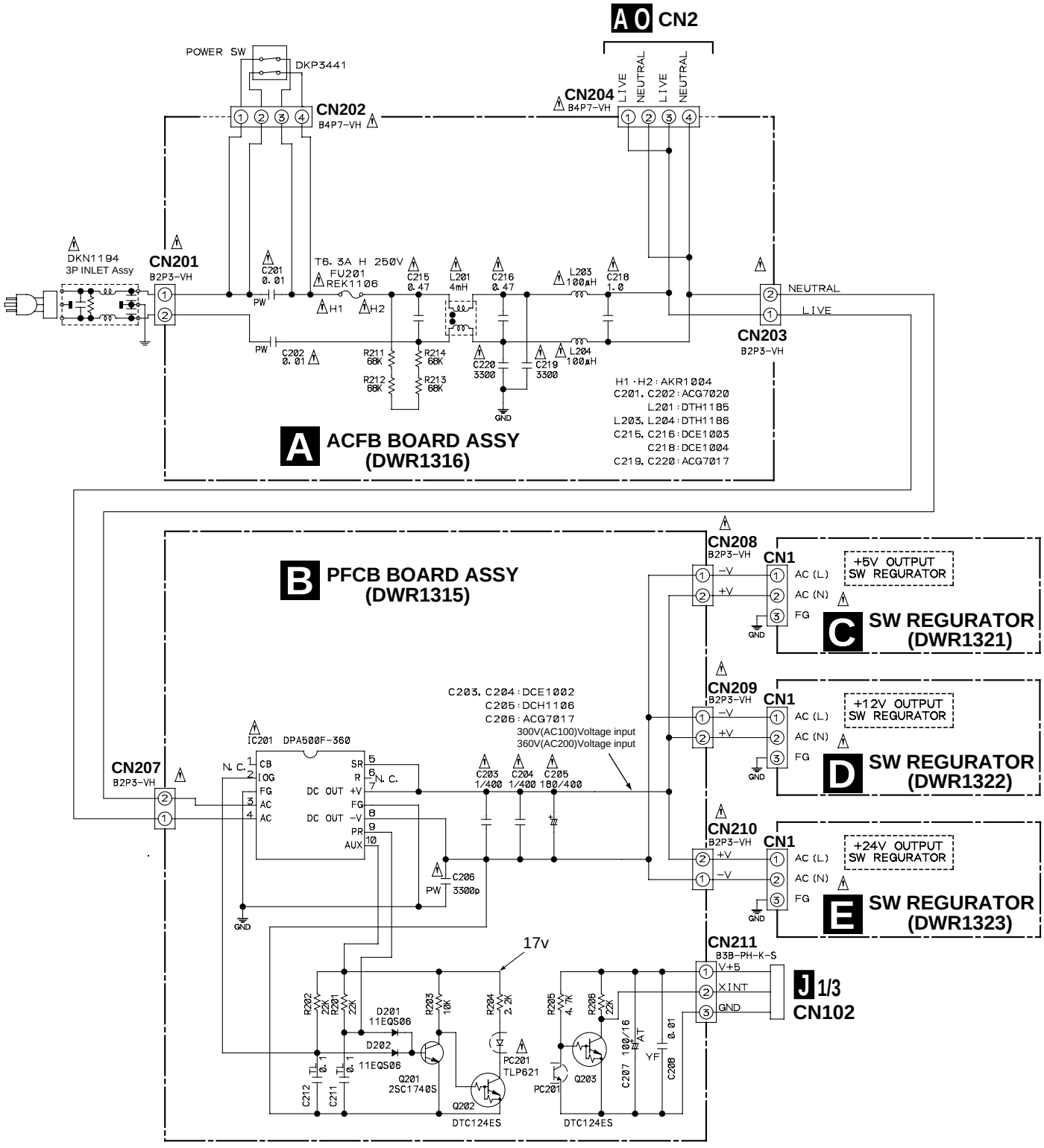

Warning

When replacing or repairing the ACFB board ASSY (DWR1316) or PFCB BOARD ASSY (DWR1315), wait sufficient time after turning off the power before removing the board. Otherwise, electric load remaining in the condensers may cause an electrical shock.

3.6 SW REGURATOR

C SW REGURATOR (DWR1321)

This schematic diagram is reference information When it is repaired plaease cope by assy exchange.

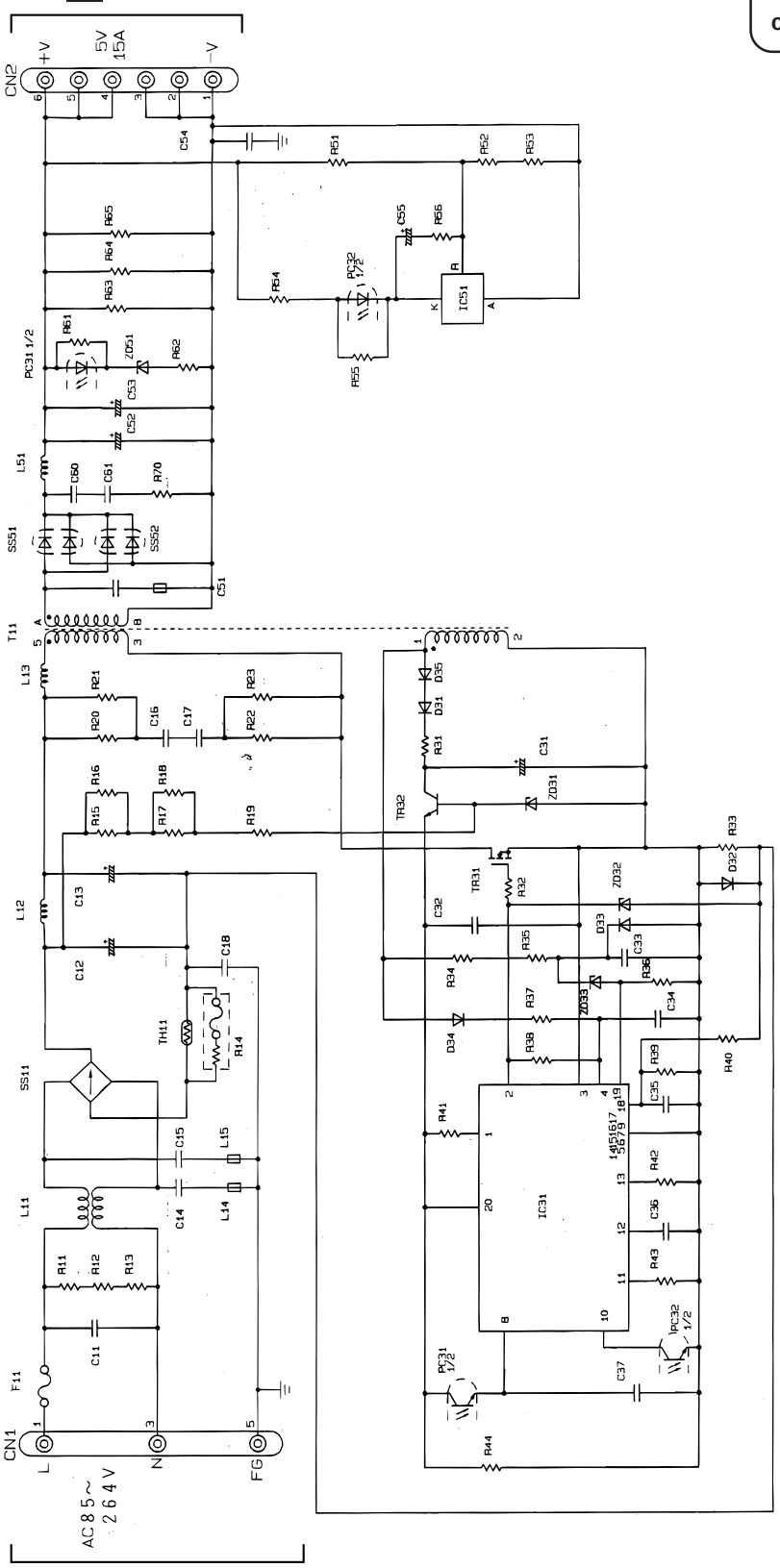

3.7 SW REGURATOR

D SW REGULATOR (DWR1322)

This schematic diagram is reference information When it is repaired plaease cope by assy exchange.

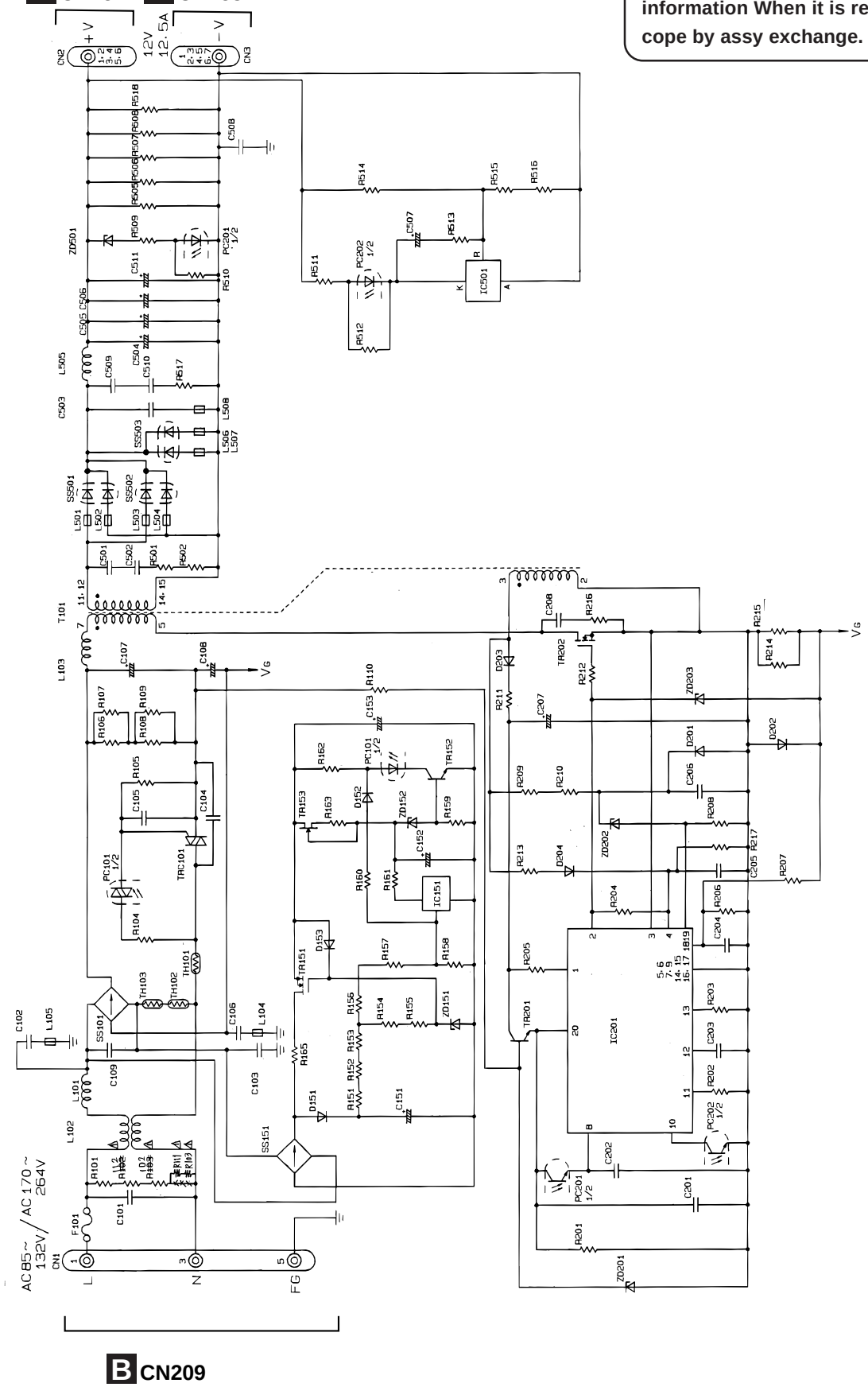

3.8 SW REGURATOR

F CN254 **F CN255**

E SW REGULATOR (DWR1323)

This schematic diagram is reference information When it is repaired plaease cope by assy exchange.

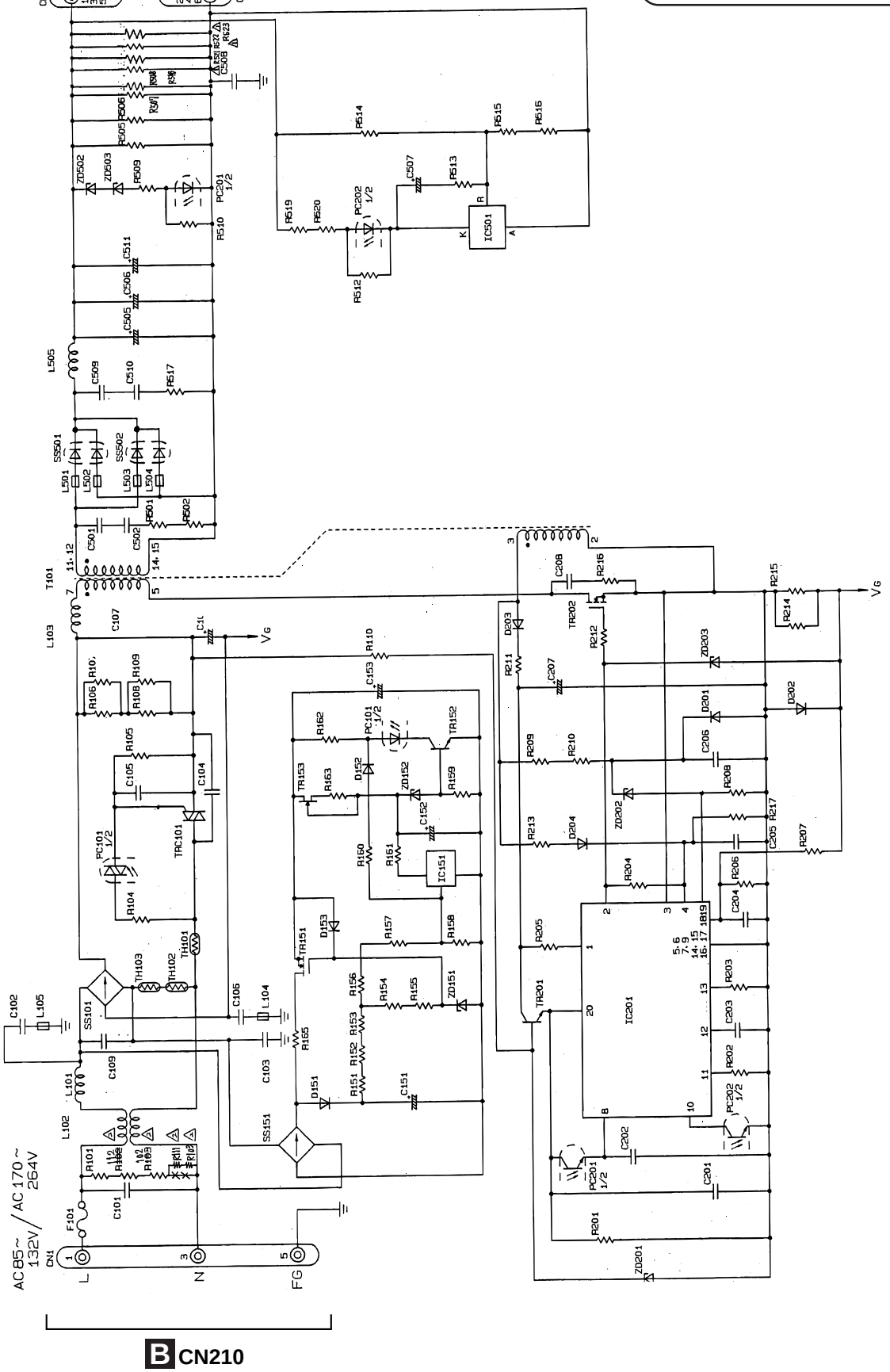

3.9 PIF1 and PIF2 BOARD ASSYS

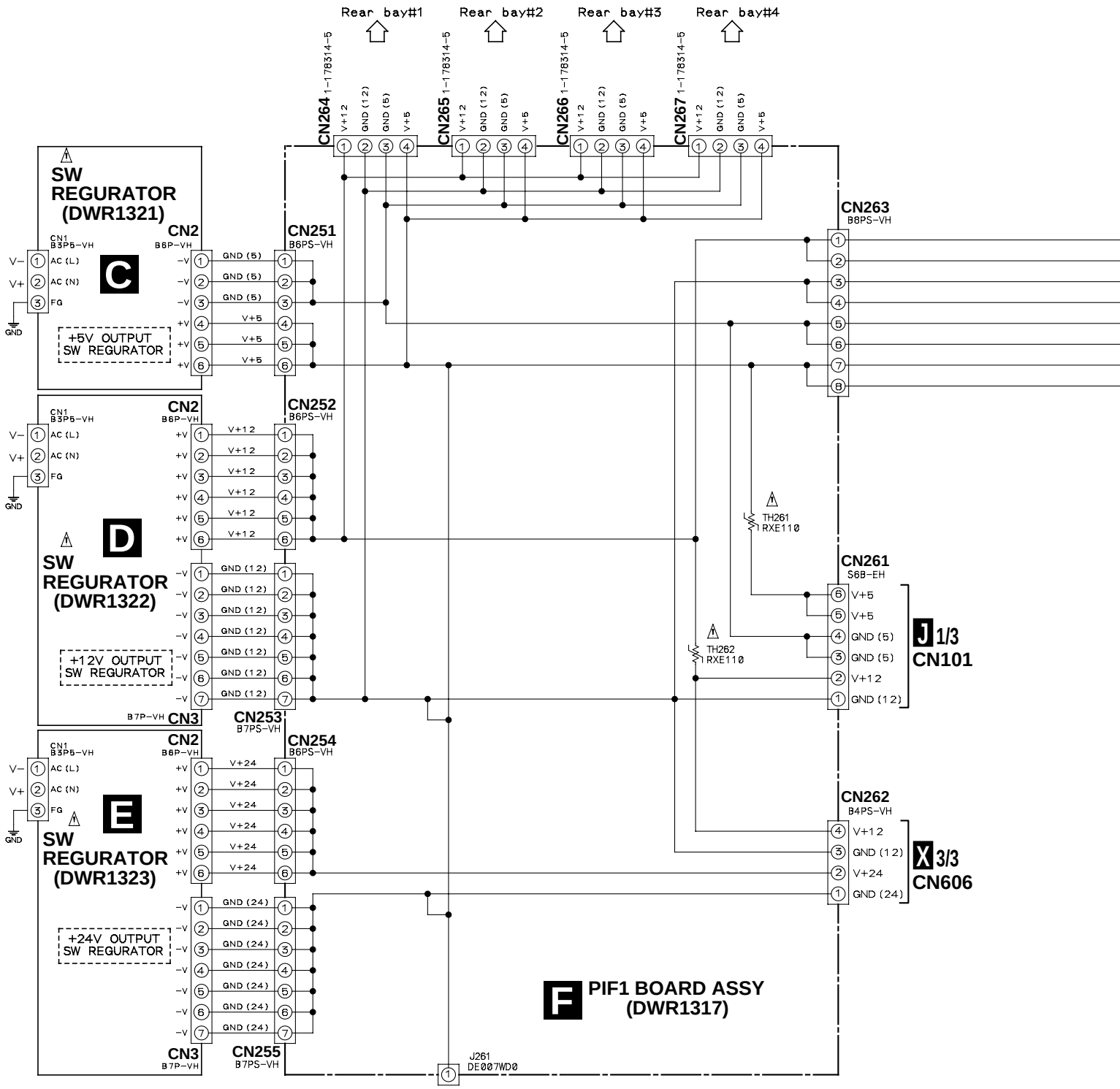

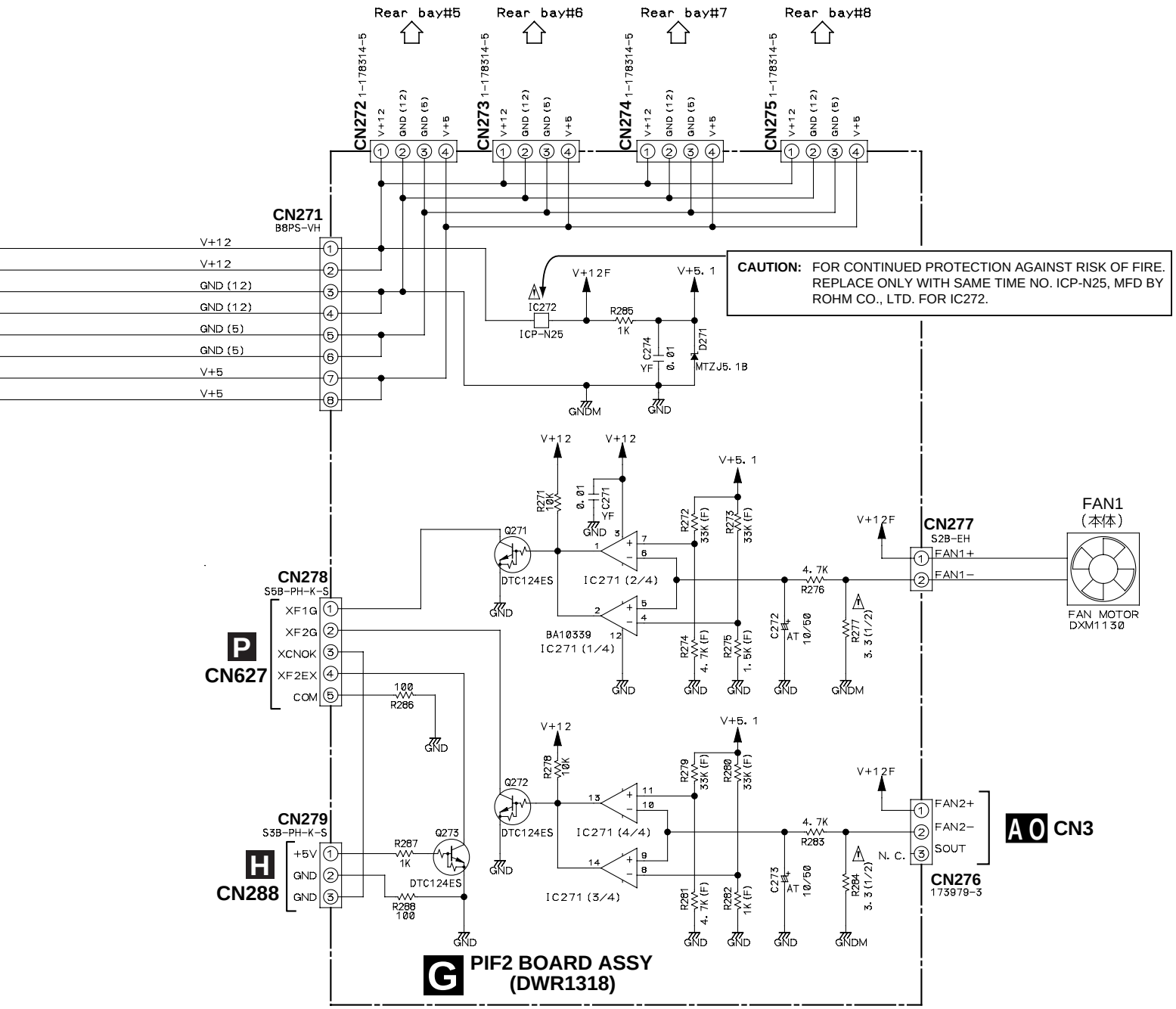

	L	H
XF1G (XFan1Good)	Fan Motor 1 (OK)	Fan Motor 1 (NG)
XF2G (XFan2Good)	Fan Motor 2 (OK)	Fan Motor 2 (NG)
XCNOK (XCoNectOK)	CN279 Conection (OK)	CN279 Conection (NG)
XF2EX (Fan2EXist)	Option Power Supplay: (Usage)	Option Power Supplay: (Not)

3.10 PIF3 and PIF4 BOARD ASSYS

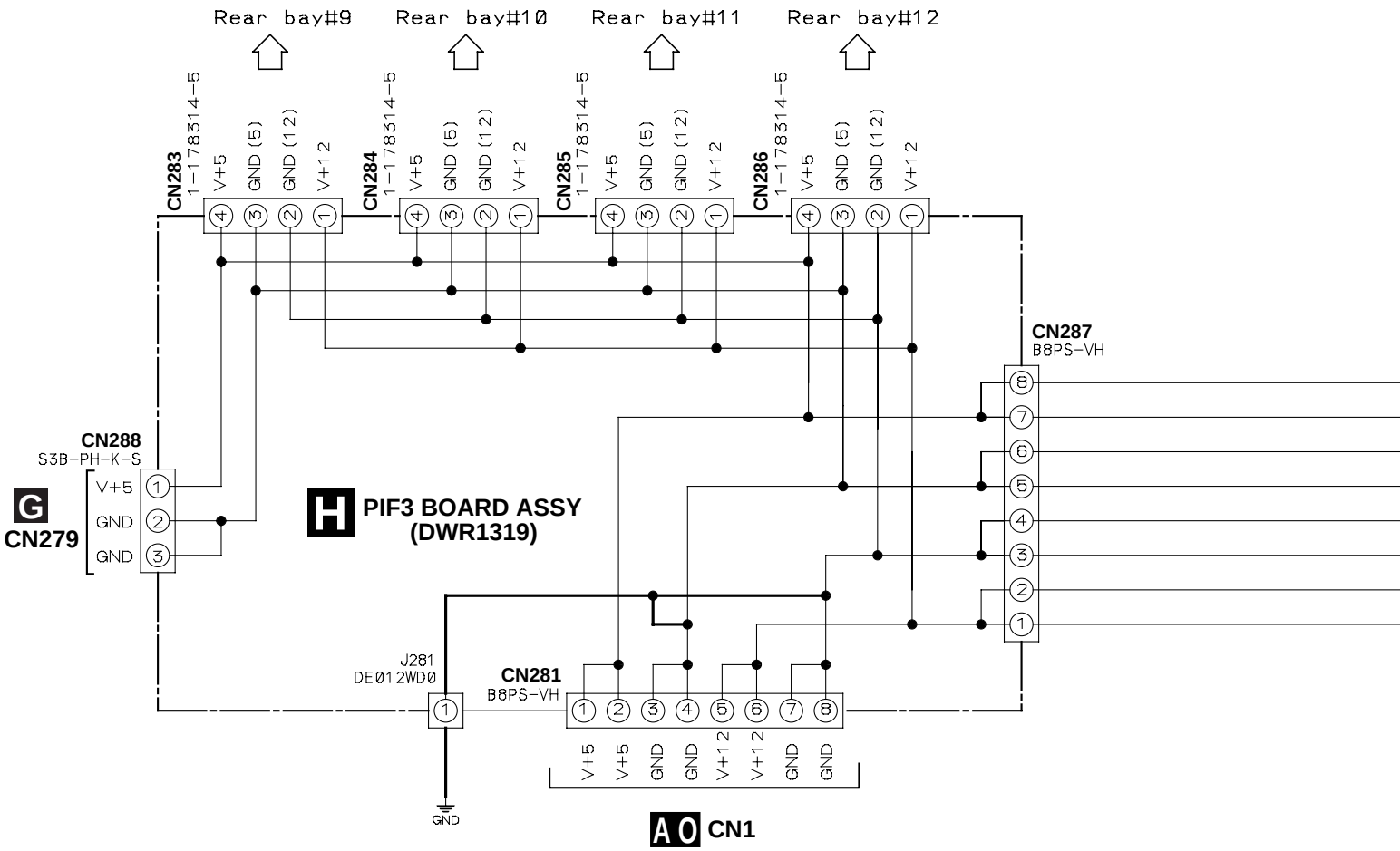

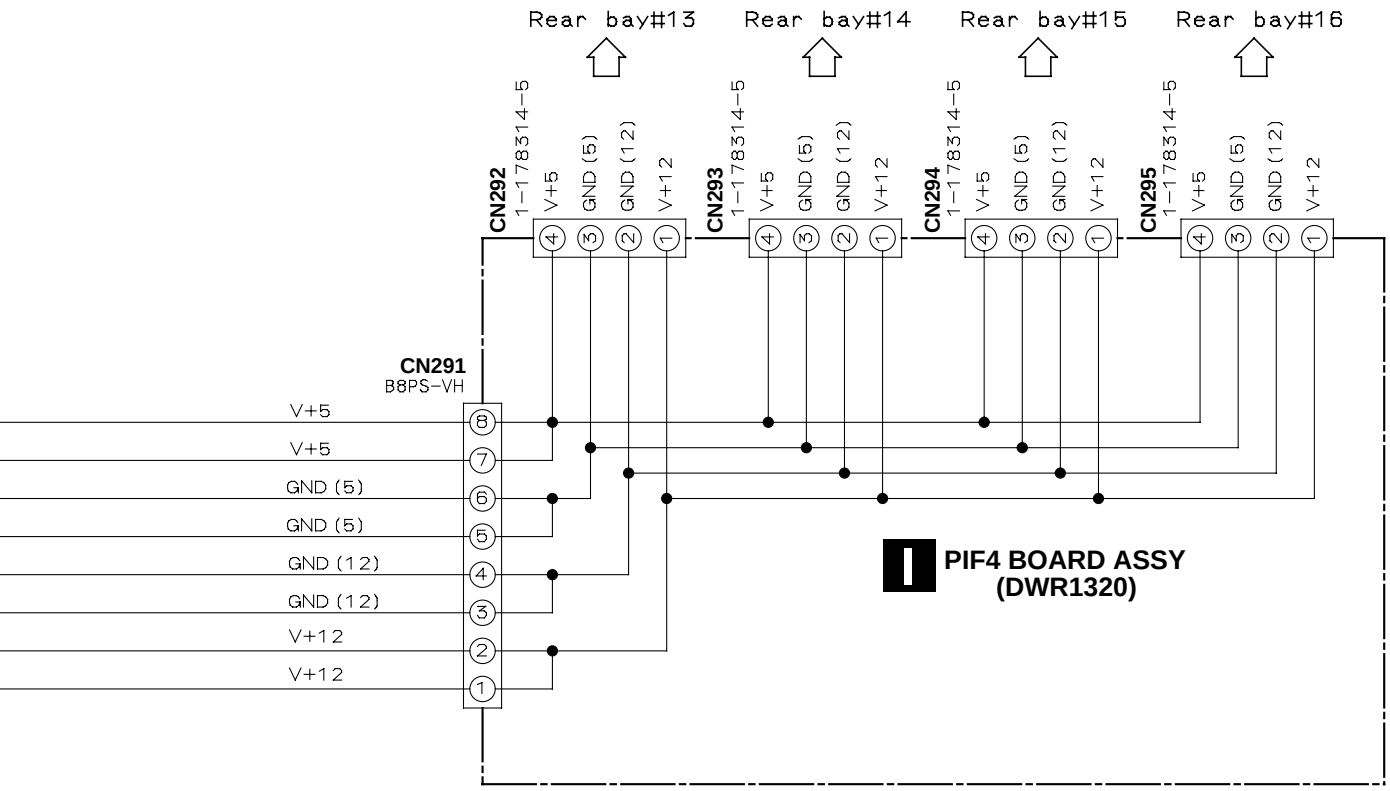
Rear bay#13
Rear bay#14
Rear bay#15
Rear bay#16
CN292
CN293
CN294
CN295
1-178314-5
V+5
GND (5)
GND (12)
V+12
CN291
B8PS-VH
V+5
V+5
GND (5)
GND (5)
GND (12)
GND (12)
V+12
V+12
PIF4 BOARD ASSY
(DWR1320)

3.11 MMCB BOARD ASSY (1/3)

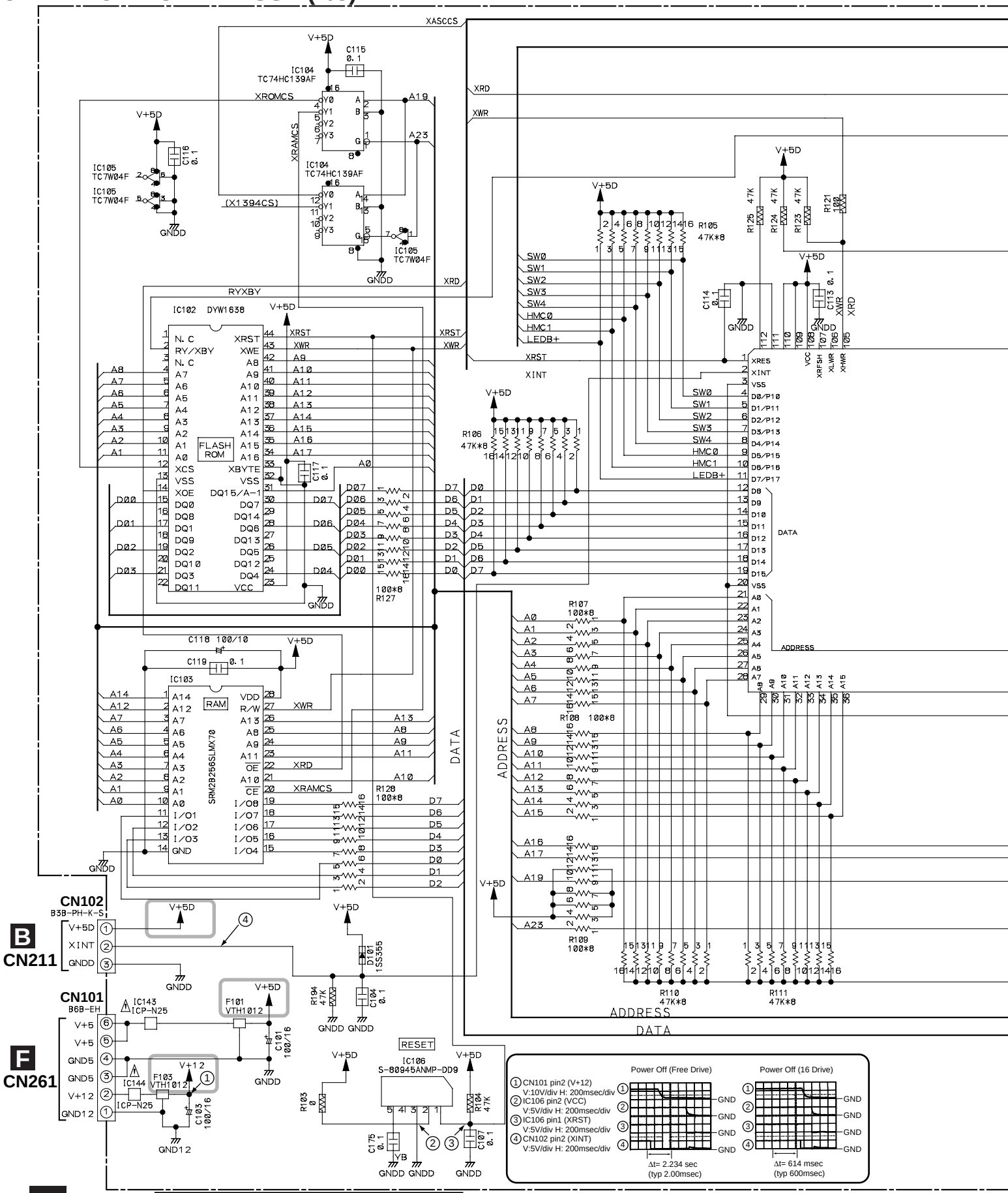

CAUTION: FOR CONTINUED PROTECTION AGAINST RISK OF FIRE. REPLACE ONLY WITH SAME TIME NO. ICP-N25, MFD BY ROHM CO., LTD. FOR IC143 and IC144.

: The power supply is shown with the marked box.

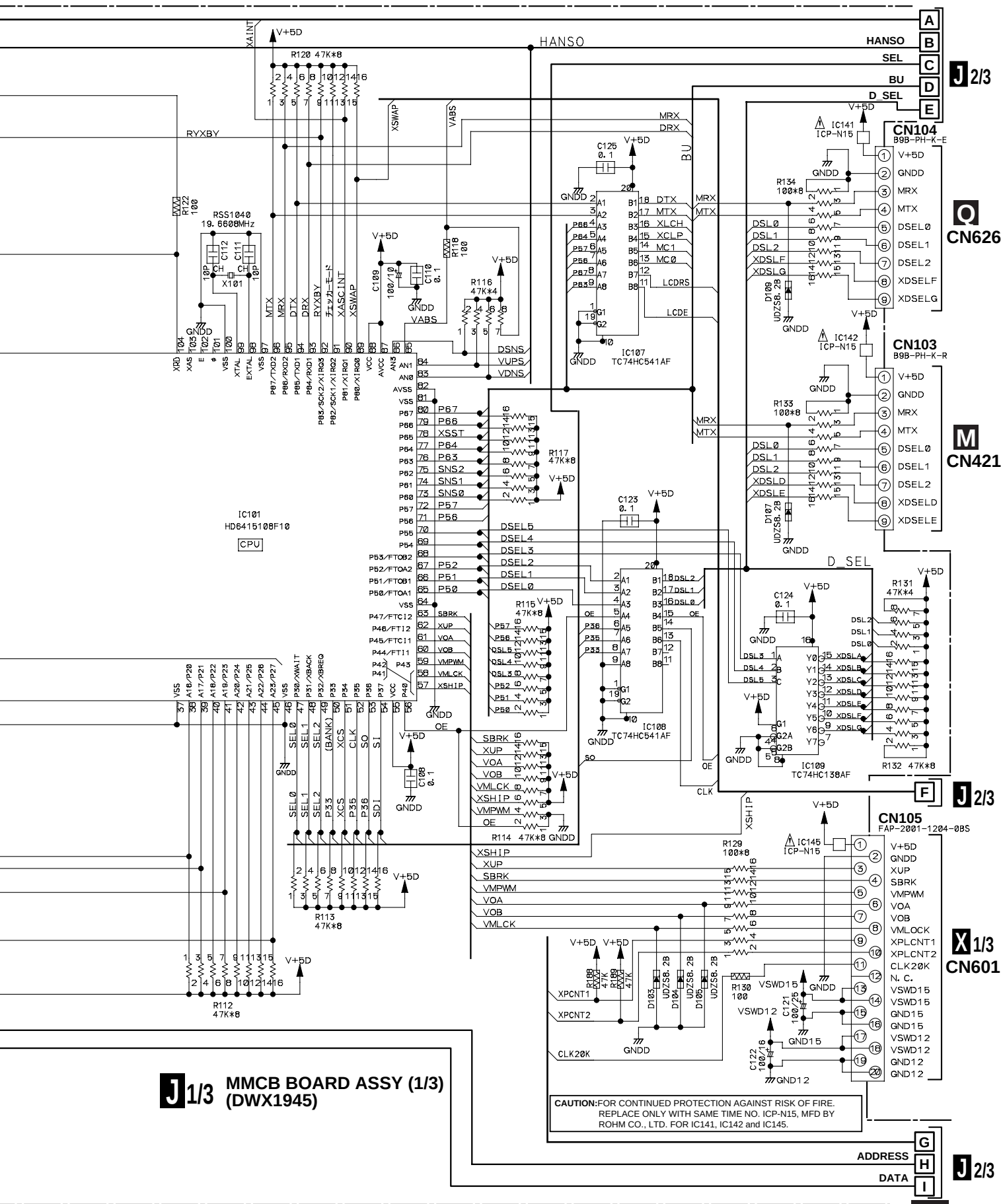
HANSO
SEL
BU
D_SEL
J 2/3
CN104
B9B-PH-K-E
Q
CN626
CN103
B9B-PH-K-R
M
CN421
IC101
HD6415108F10
CPU
IC107
TC74HC541AF
IC108
TC74HC541AF
IC109
TC74HC138AF
CN105
FAP-2001-1204-0BS
X 1/3
CN601
ADDRESS
DATA
J 1/3
MMCB BOARD ASSY (1/3)
(DWX1945)
CAUTION: FOR CONTINUED PROTECTION AGAINST RISK OF FIRE. REPLACE ONLY WITH SAME TIME NO. ICP-N15, MFD BY ROHM CO., LTD. FOR IC141, IC142 and IC145.

3.12 MMCB BOARD ASSY (2/3)

CAUTION: FOR CONTINUED PROTECTION AGAINST RISK OF FIRE. REPLACE ONLY WITH SAME TIME NO. ICP-N15, MFD BY ROHM CO., LTD. FOR IC130 and IC131.

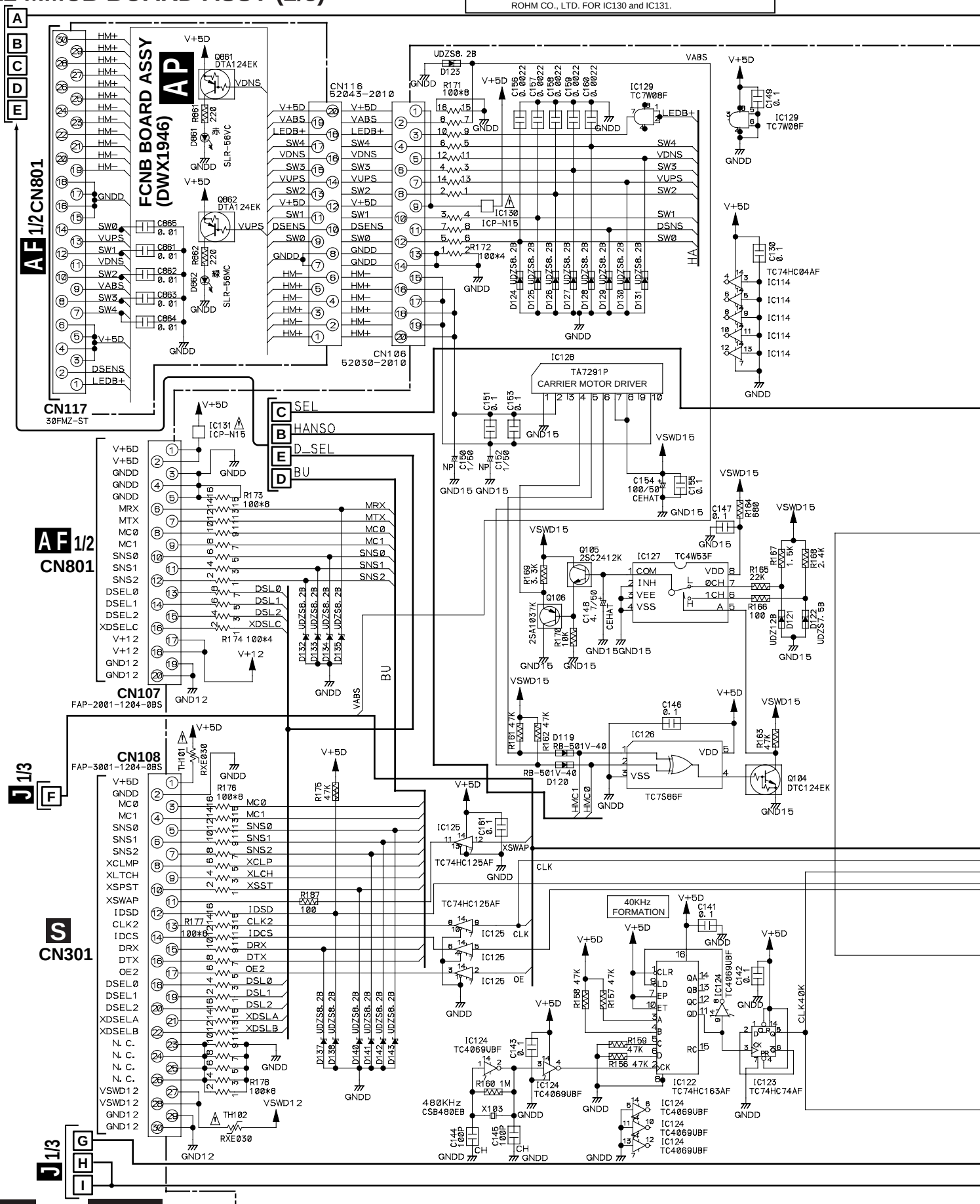

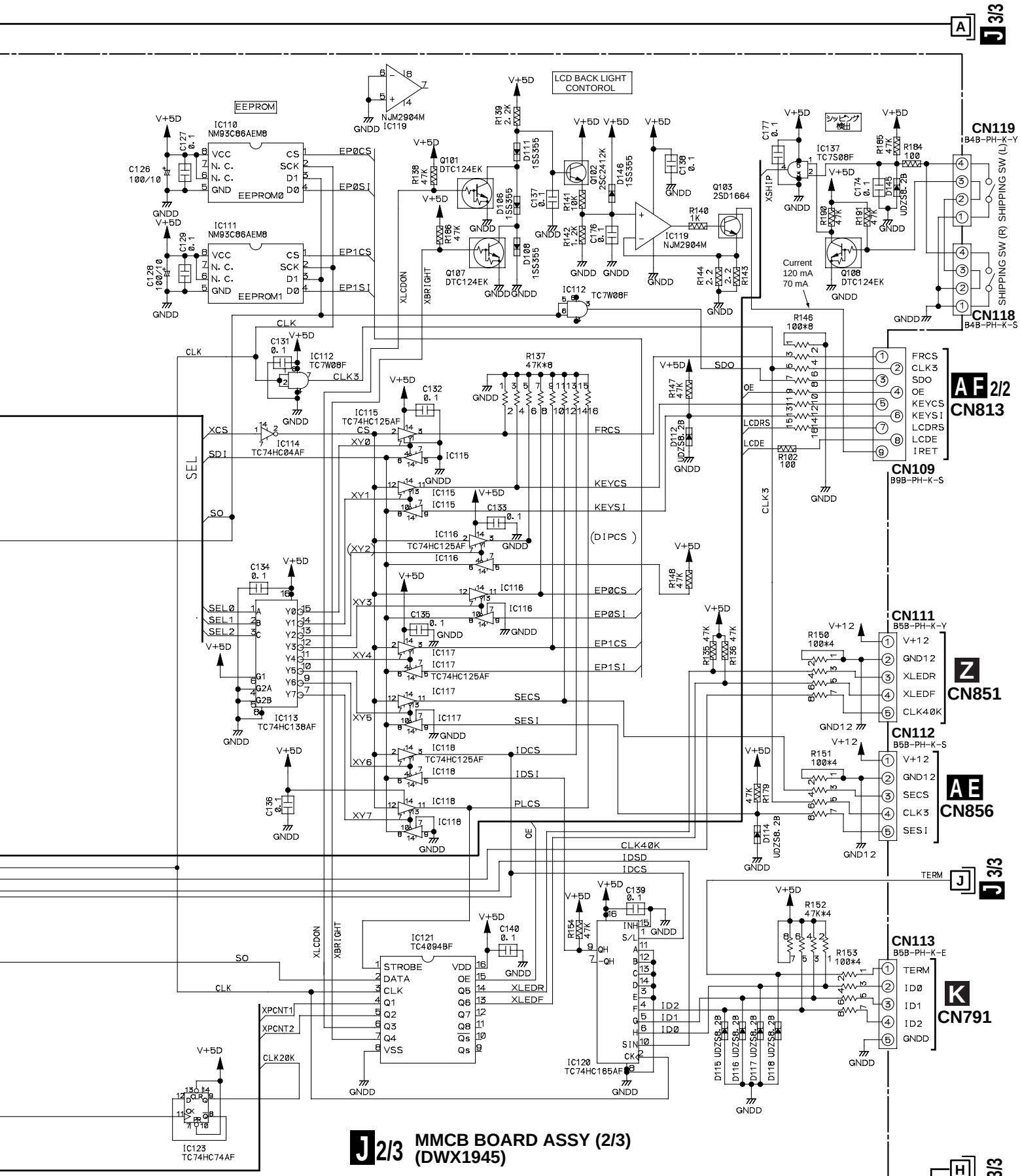
EEPROM
LCD BACK LIGHT CONTOROL
IC110 NM93C86AEM8
IC111 NM93C86AEM8
EEPROM0
EEPROM1
NJM2904M IC119
TC7W08F IC112
TC74HC04AF IC114
TC74HC125AF IC115
TC74HC125AF IC116
TC74HC138AF IC113
TC74HC125AF IC117
TC74HC125AF IC118
TC4094BF IC121
TC74HC74AF IC123
TC74HC165AF IC120
TC7S08F IC137
NJM2904M IC119
DTC124EK Q101
DTC124EK Q107
DTC124EK Q108
2SC2412K Q102
2SD1664 Q103
1SS355
UDZS8.2B
CN119 B4B-PH-K-Y
CN118 B4B-PH-K-S
CN813 AF 2/2
CN109 B9B-PH-K-S
CN111 B5B-PH-K-Y
CN851 Z
CN112 B5B-PH-K-S
CN856 AE
CN113 B5B-PH-K-E
CN791 K
SHIPPING SW (L)
SHIPPING SW (R)
Current 120 mA 70 mA
J 2/3 MMCB BOARD ASSY (2/3) (DWX1945)
J 3/3
57

3.13 MMCB (3/3) , TMNB and IDSB BOARD ASSYS

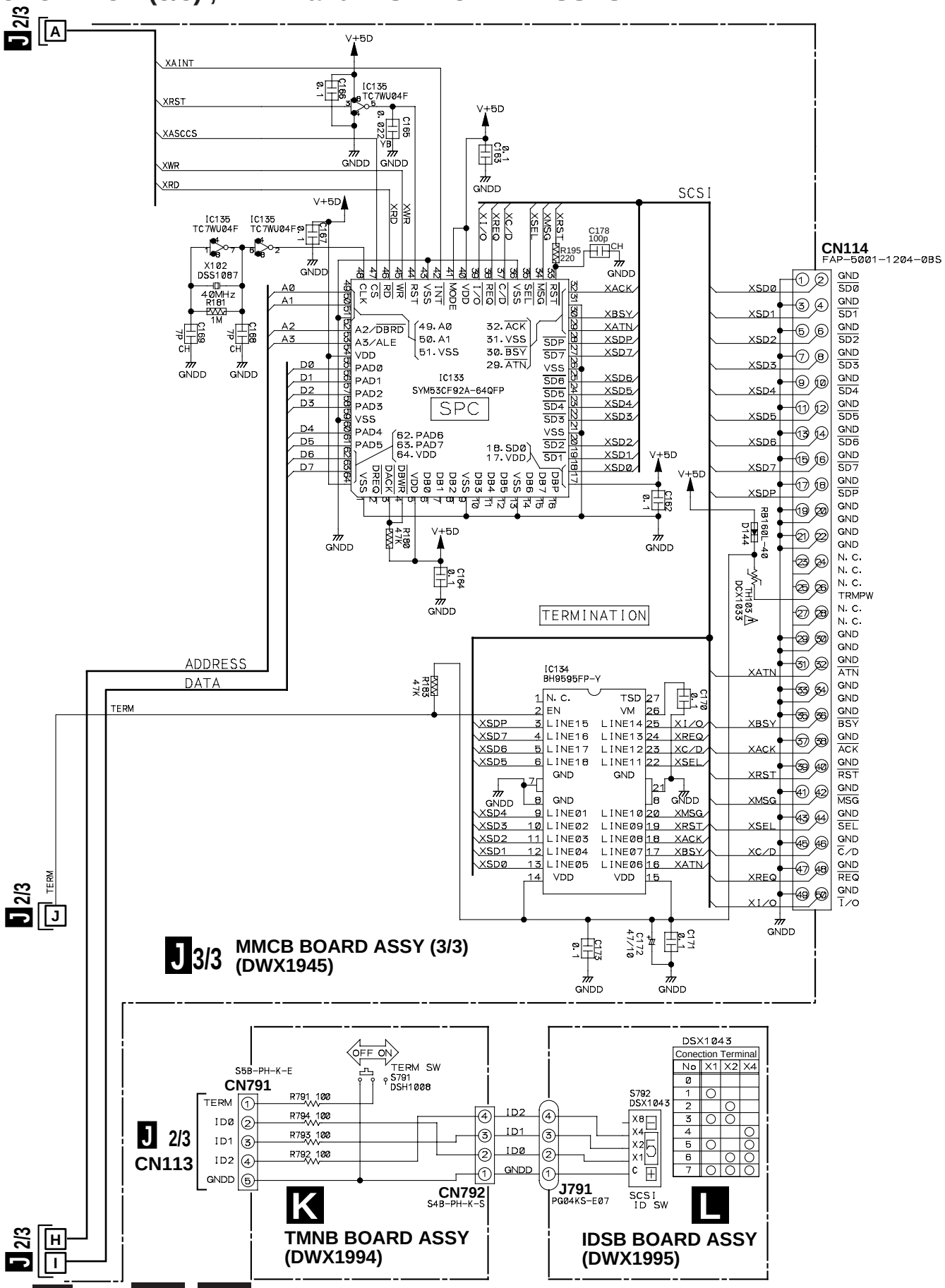

3.14 MIF1F BOARD ASSY

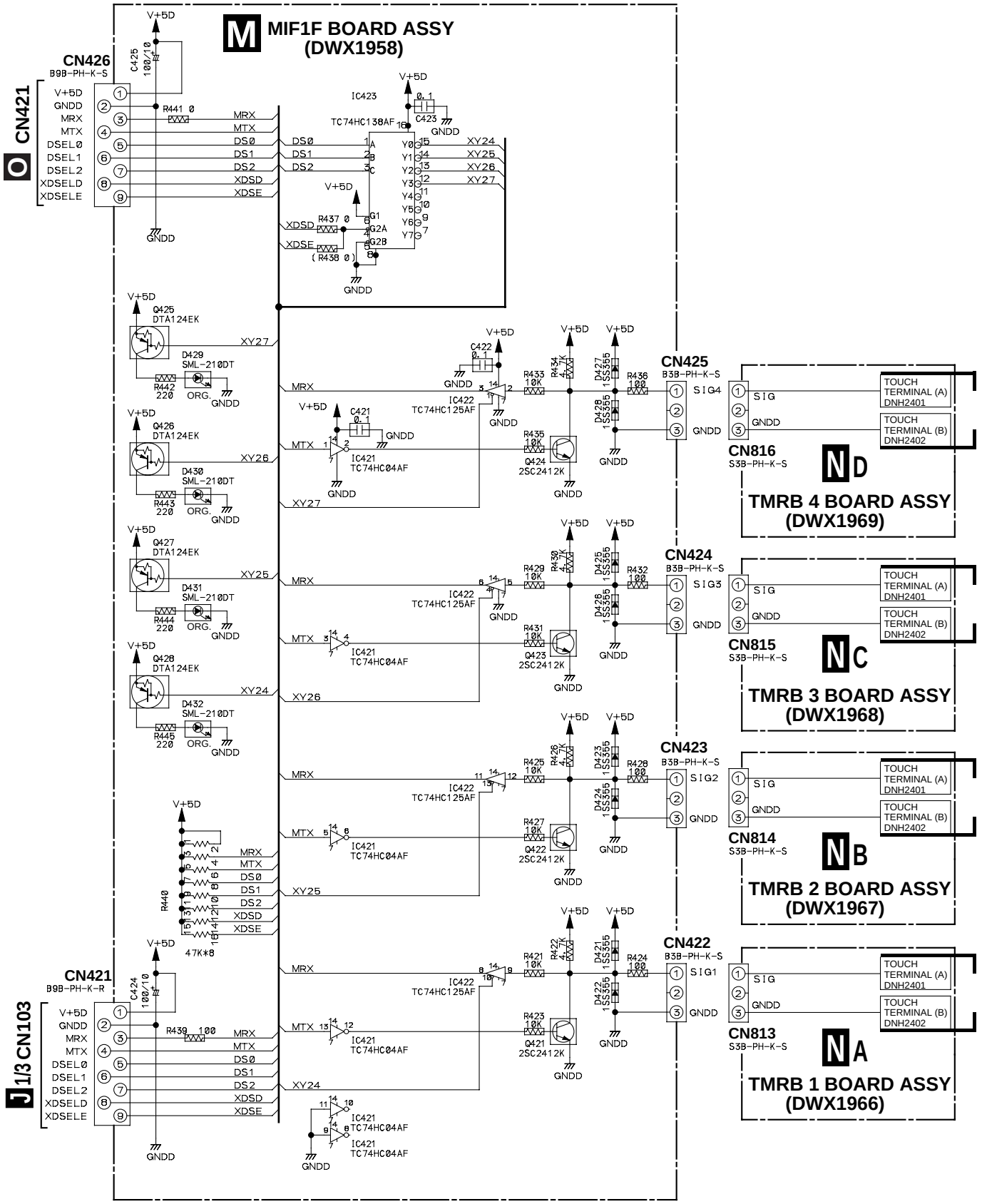

3.15 MIF2F BOARD ASSY

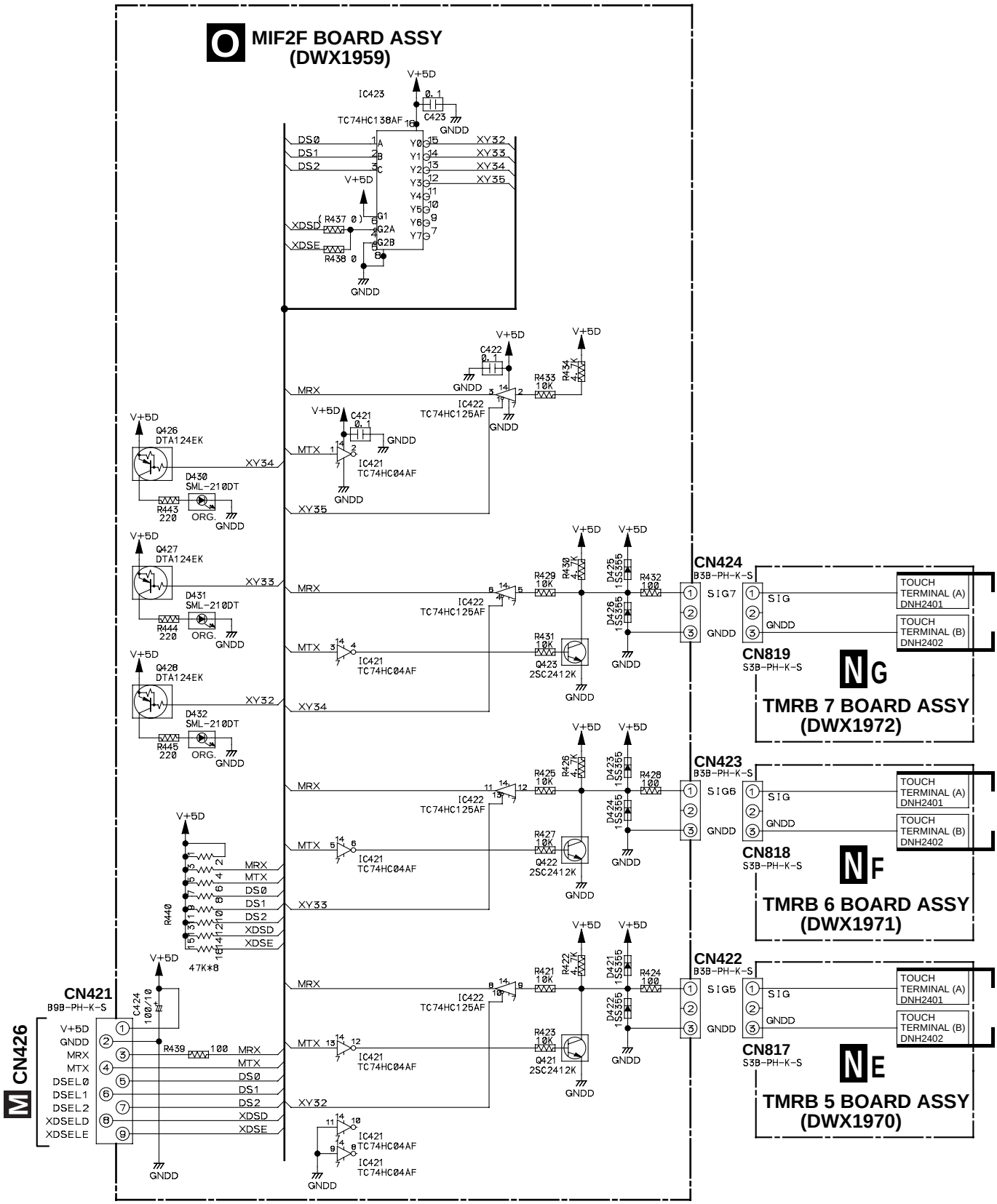

3.16 MIF1R BOARD ASSY

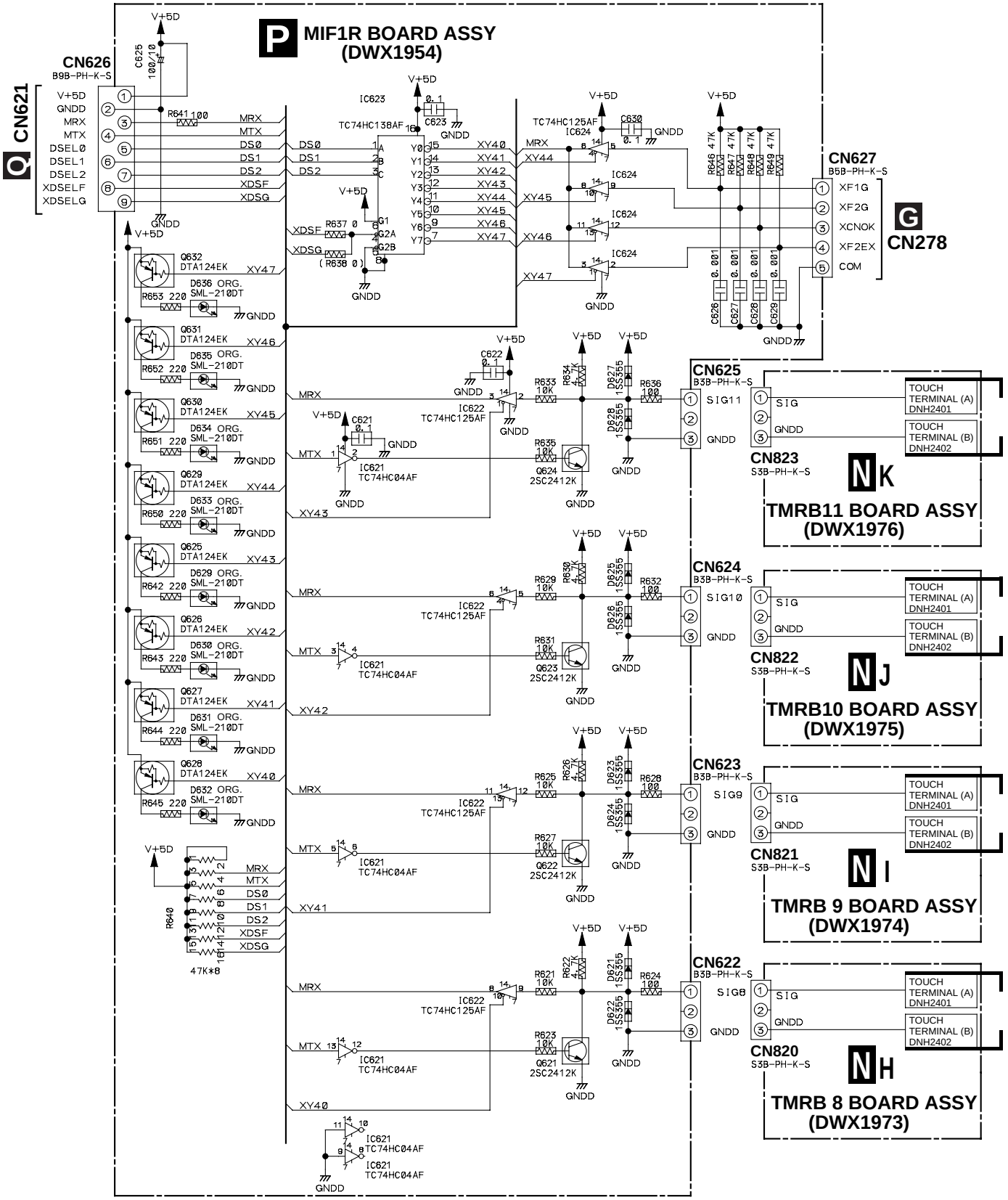

3.17 MIF2R BOARD ASSY

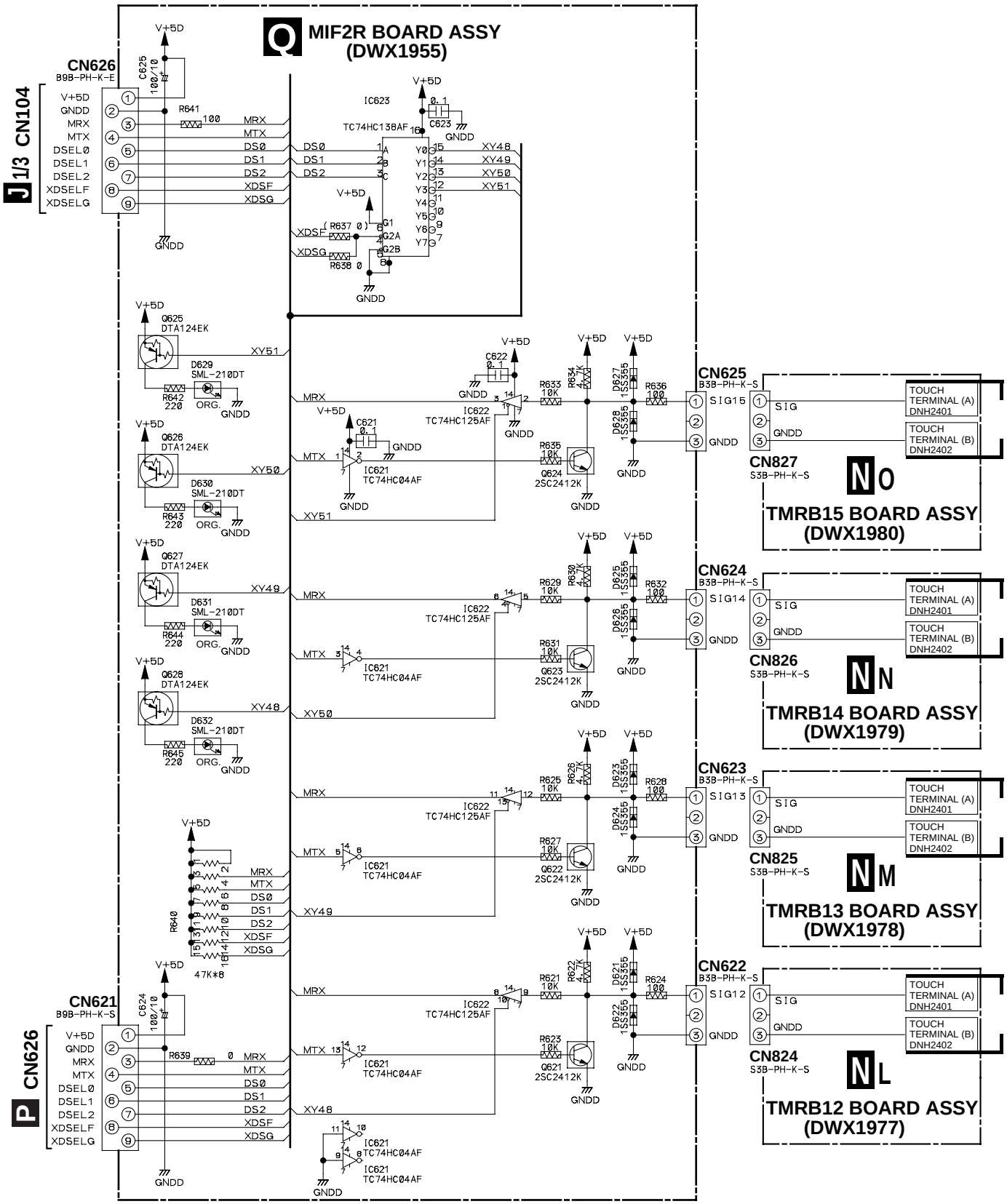

3.18 FRPB BOARD ASSY

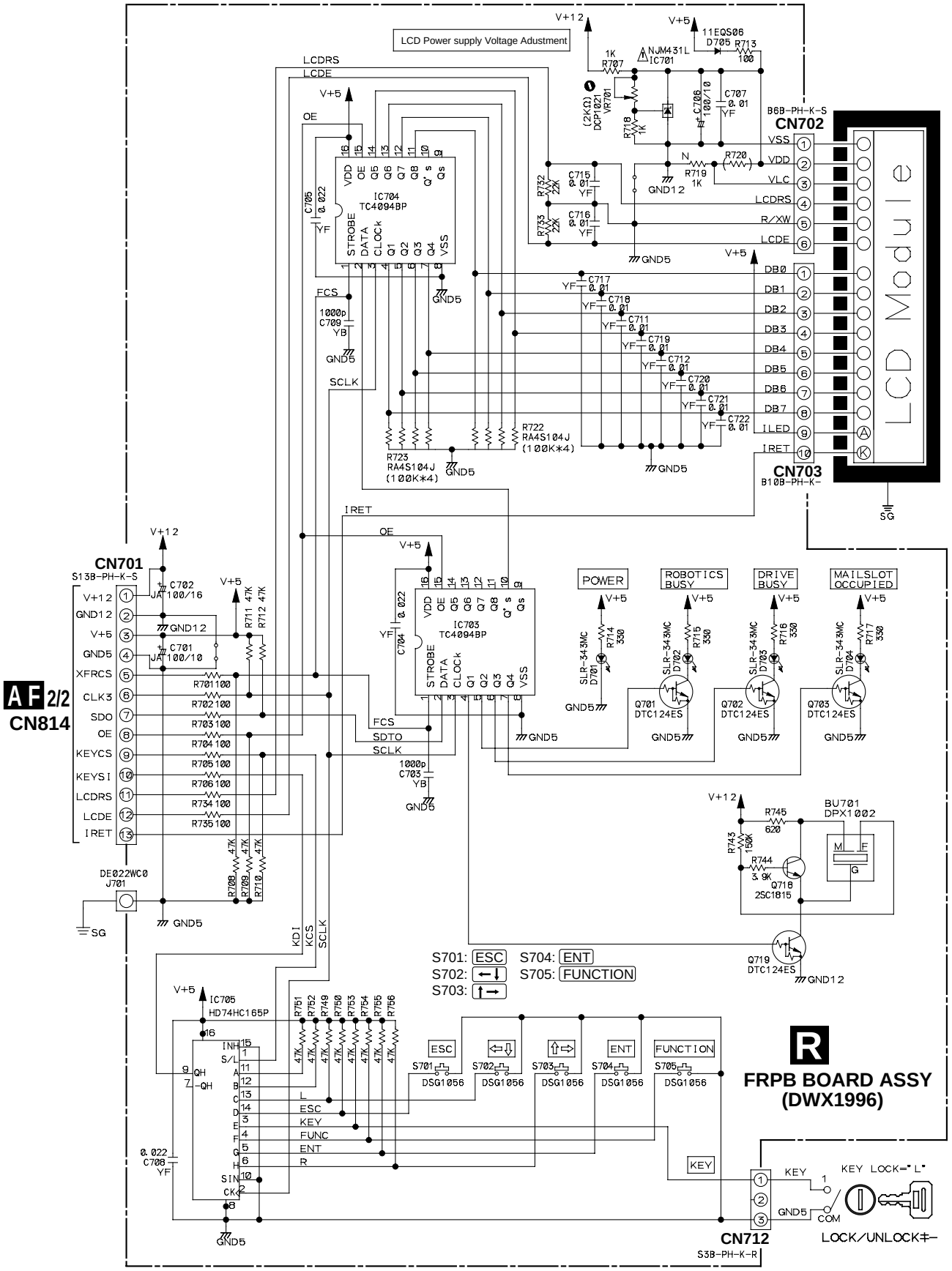

3.19 DIFB1 BOARD ASSY

S **DIFB1 BOARD ASSY**
(DWX1952)

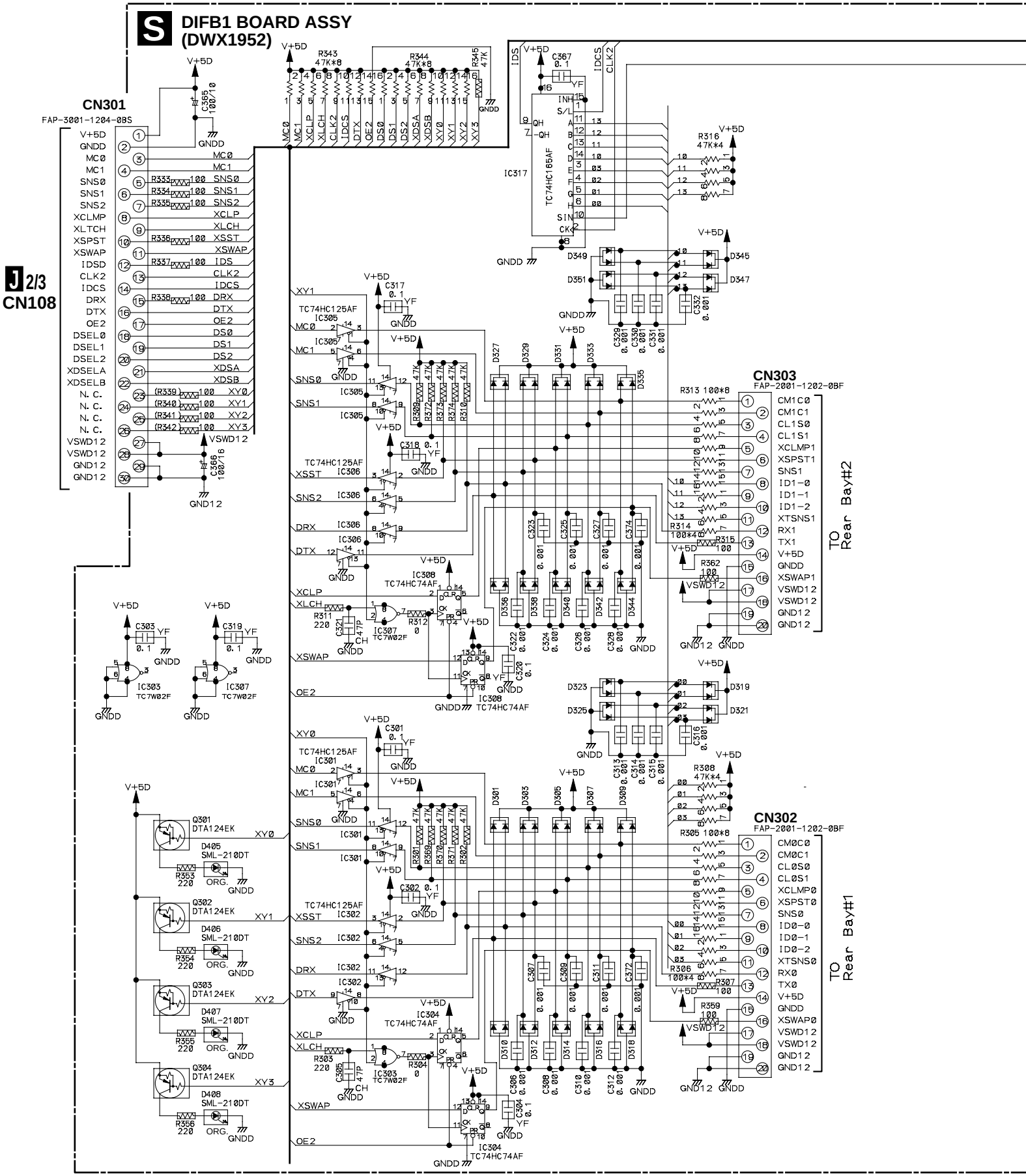

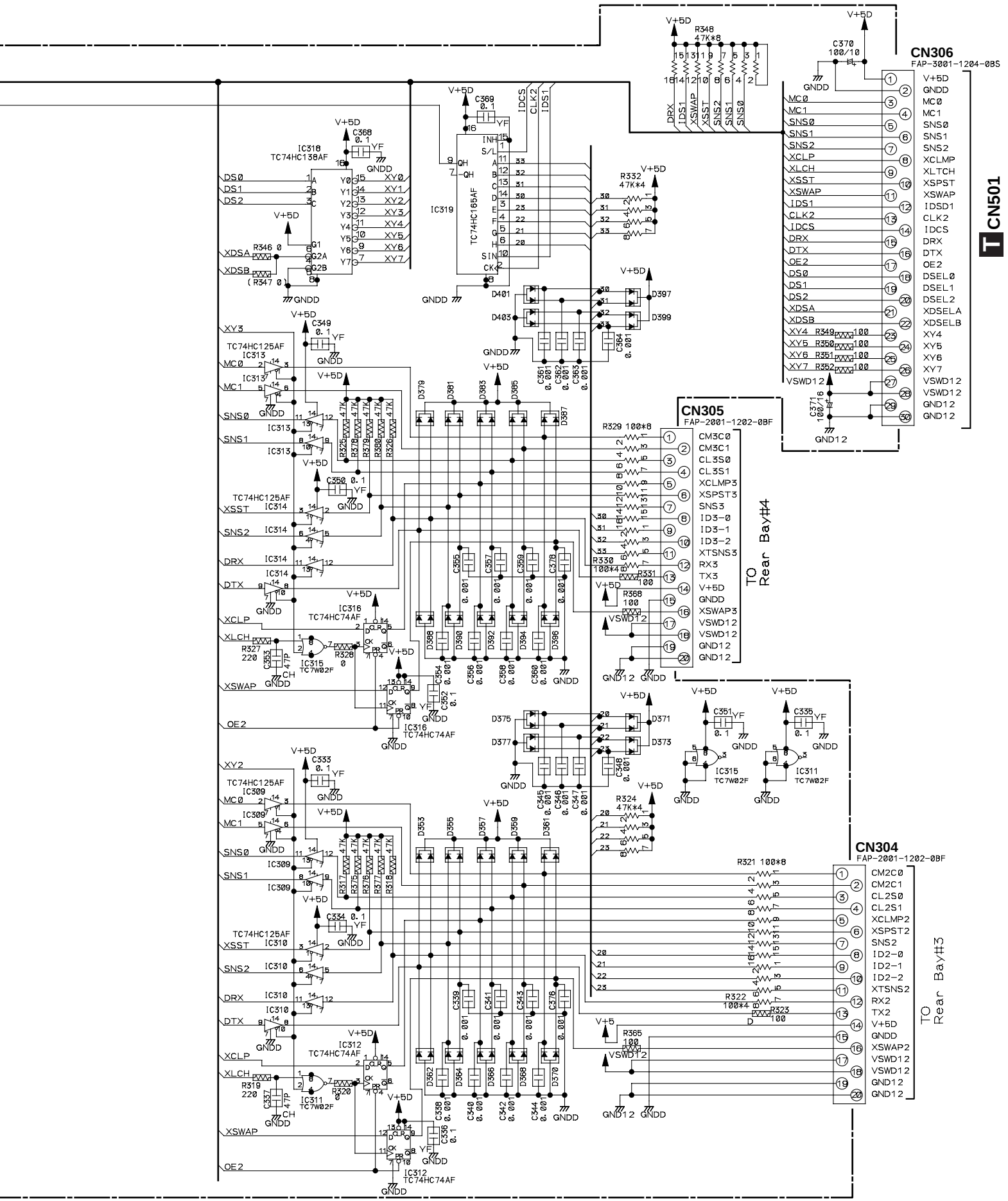
CN306
FAP-3001-1204-0BS
CN501
CN305
FAP-2001-1202-0BF
TO Rear Bay#4
CN304
FAP-2001-1202-0BF
TO Rear Bay#3
IC318 TC74HC138AF
IC319 TC74HC165AF
IC313 TC74HC125AF
IC314 TC74HC125AF
IC309 TC74HC125AF
IC310 TC74HC125AF
IC316 TC74HC74AF
IC312 TC74HC74AF
IC315 TC7W02F
IC311 TC7W02F
V+5D
GNDD
GND12
VSWD12

3.20 DIFB2 BOARD ASSY

T **DIFB2 BOARD ASSY (DWX1953)**

S **CN306**

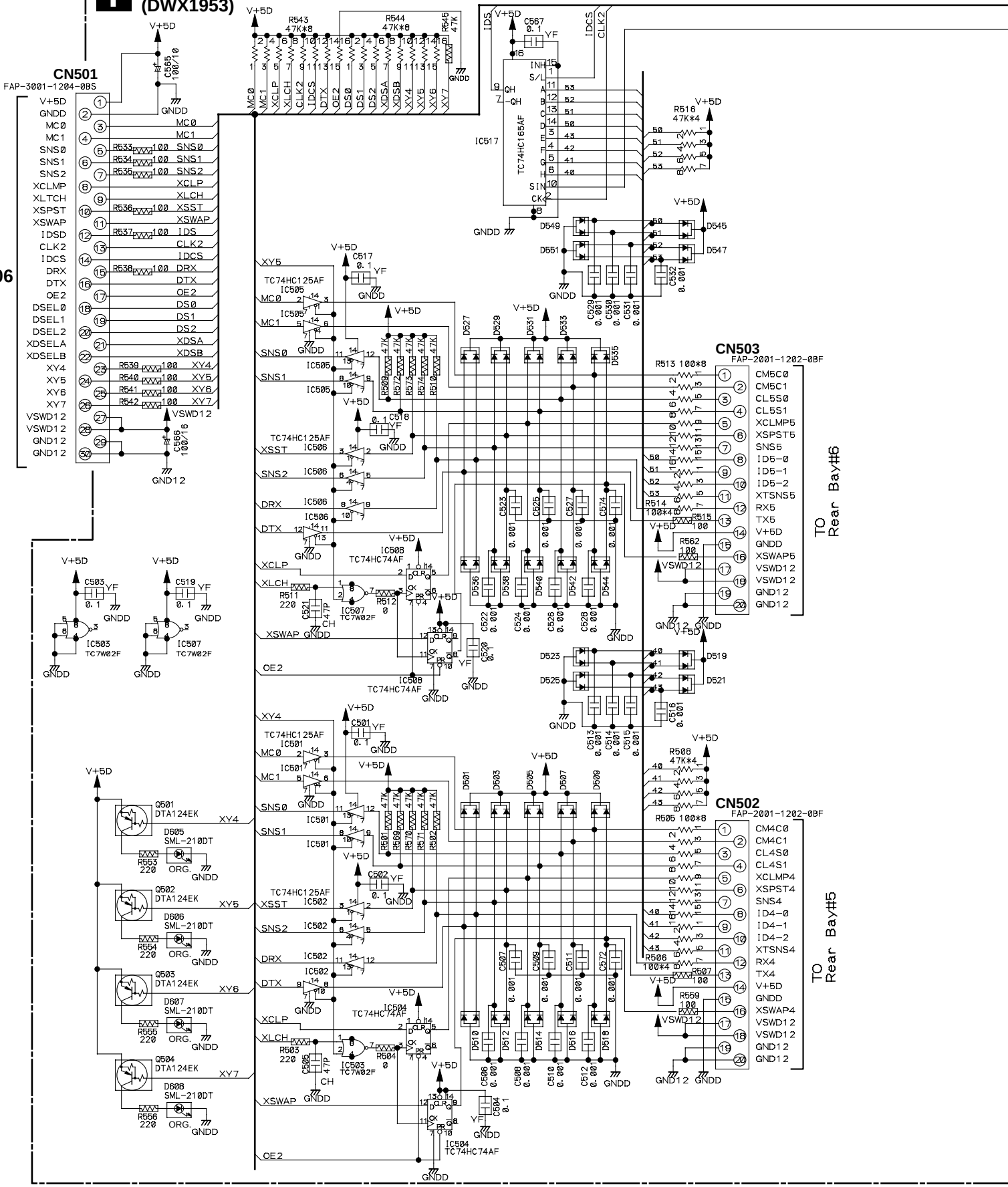

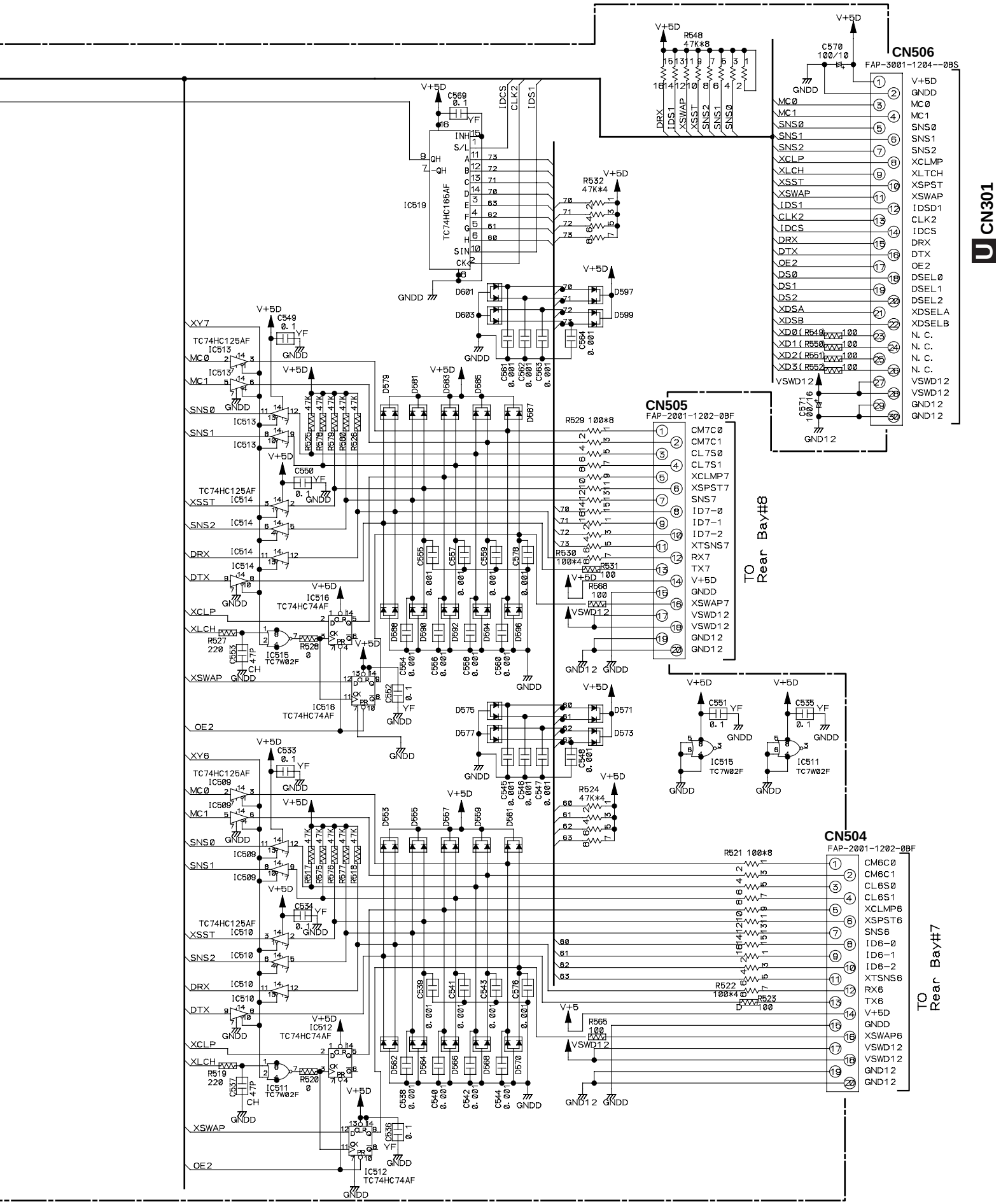
CN506
FAP-3001-1204--0BS
CN301
CN505
FAP-2001-1202-0BF
TO Rear Bay#8
CN504
FAP-2001-1202-0BF
TO Rear Bay#7
IC513 TC74HC125AF
IC514 TC74HC125AF
IC509 TC74HC125AF
IC510 TC74HC125AF
IC516 TC74HC74AF
IC512 TC74HC74AF
IC519 TC74HC165AF
IC515 TC7W02F
IC511 TC7W02F
V+5D
GNDD
GND12

3.21 DIFB3 BOARD ASSY

U DIFB3 BOARD ASSY (DWX1956)

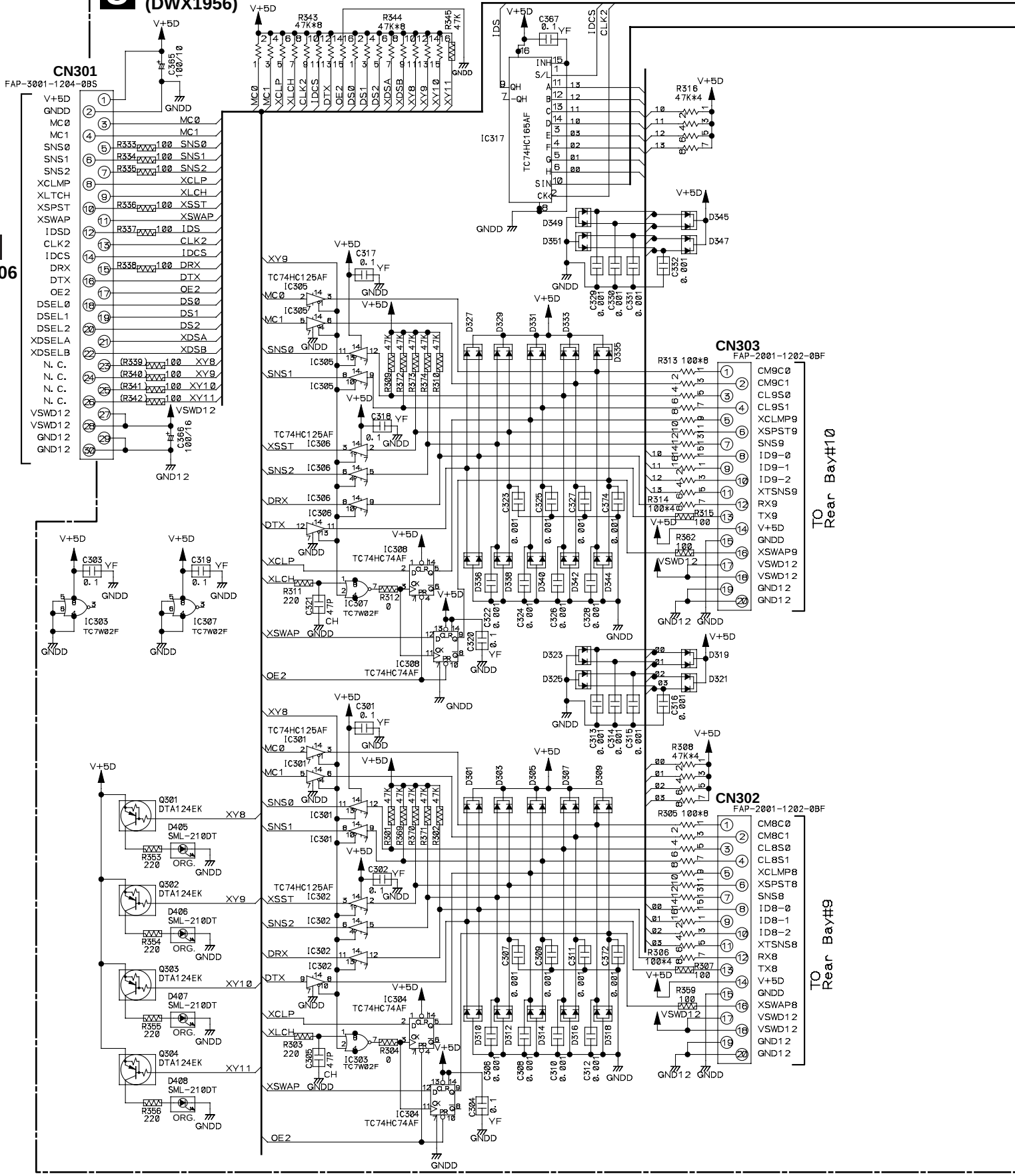

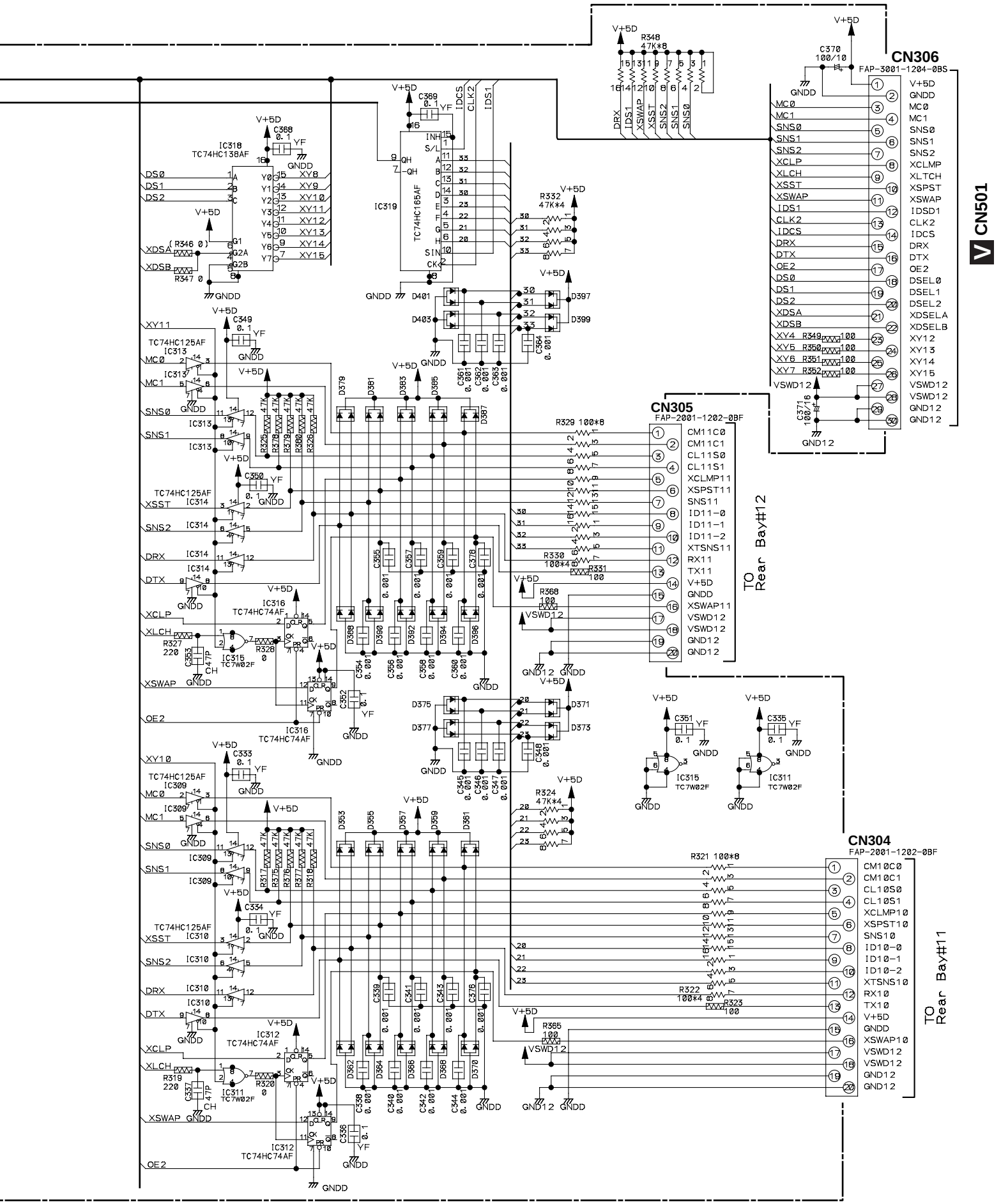
CN306
FAP-3001-1204-0BS
CN501
CN305
FAP-2001-1202-0BF
TO Rear Bay#12
CN304
FAP-2001-1202-0BF
TO Rear Bay#11
IC318 TC74HC138AF
IC319 TC74HC165AF
IC313 TC74HC125AF
IC314 TC74HC125AF
IC309 TC74HC125AF
IC310 TC74HC125AF
IC316 TC74HC74AF
IC312 TC74HC74AF
IC315 TC7W02F
IC311 TC7W02F
R348 47K*8
R332 47K*4
R324 47K*4
R329 100*8
R330 100*4
R321 100*8
R322 100*4
V+5D
GNDD
GND12
VSWD12

3.22 DIFB4 BOARD ASSY

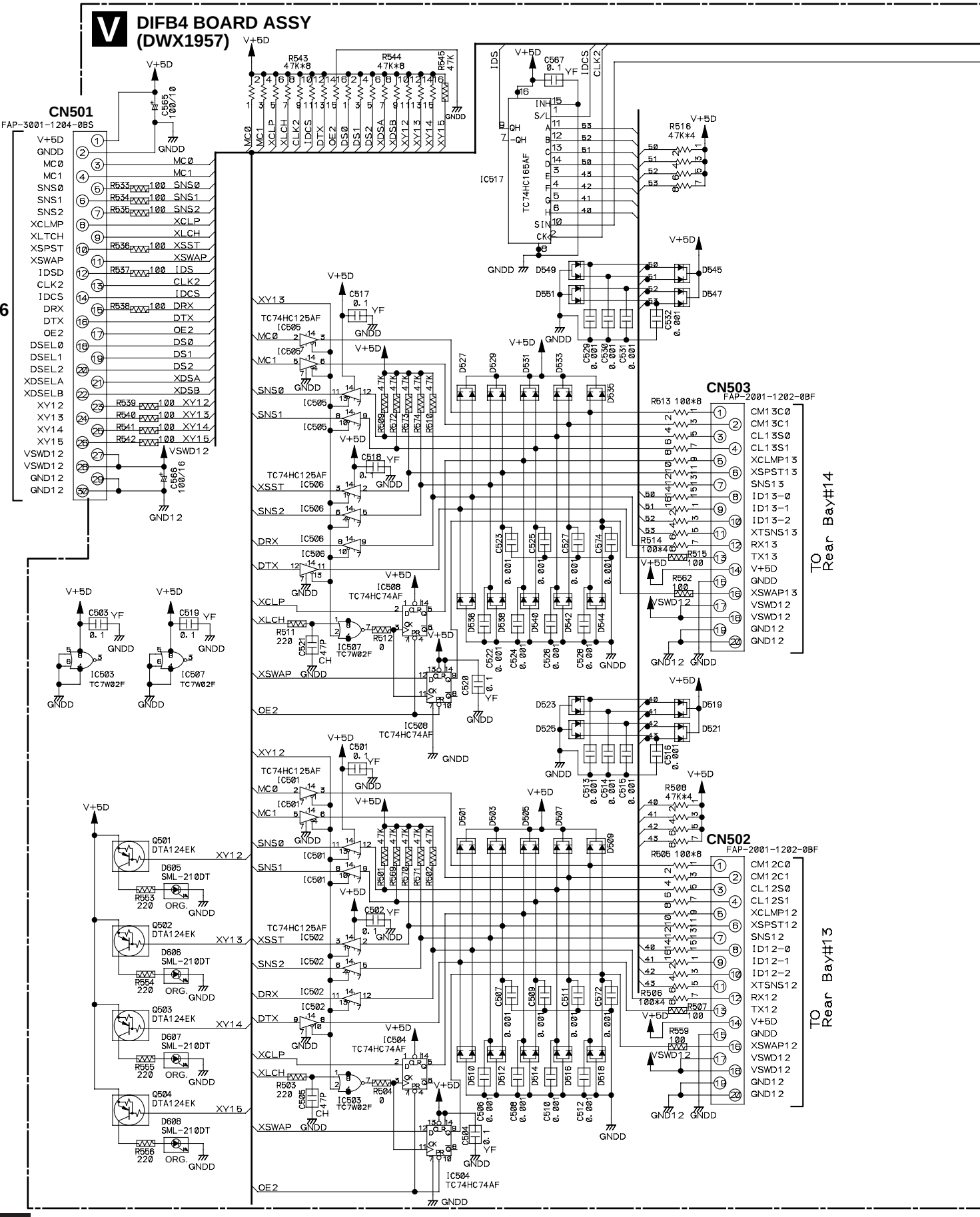

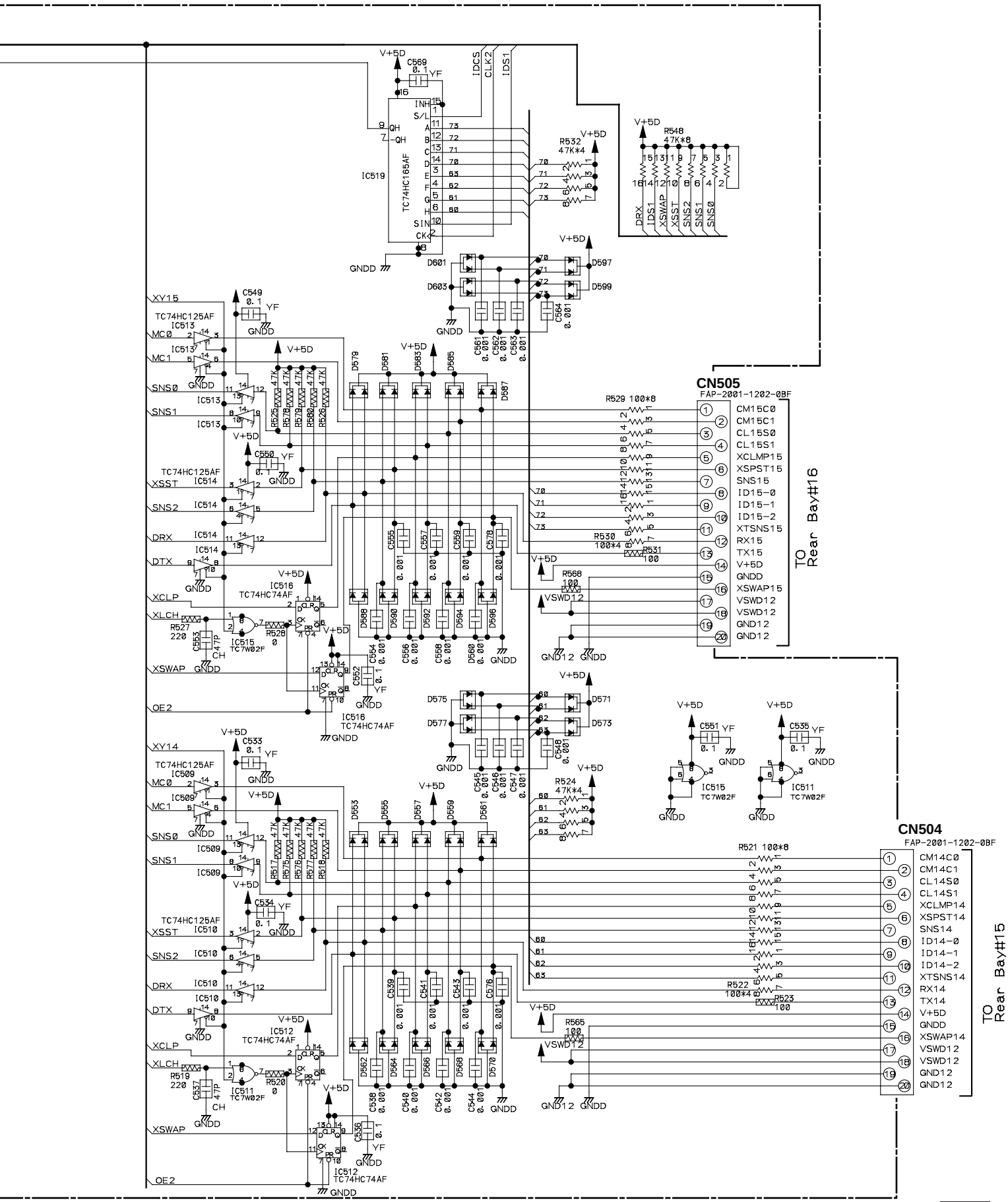
CN505
FAP-2001-1202-0BF
CM15C0
CM15C1
CL15S0
CL15S1
XCLMP15
XSPST15
SNS15
ID15-0
ID15-1
ID15-2
XTSNS15
RX15
TX15
V+5D
GNDD
XSWAP15
VSWD12
VSWD12
GND12
GND12
TO Rear Bay#16
CN504
FAP-2001-1202-0BF
CM14C0
CM14C1
CL14S0
CL14S1
XCLMP14
XSPST14
SNS14
ID14-0
ID14-1
ID14-2
XTSNS14
RX14
TX14
V+5D
GNDD
XSWAP14
VSWD12
VSWD12
GND12
GND12
TO Rear Bay#15
IC519
TC74HC165AF
IC513
TC74HC125AF
IC514
TC74HC125AF
IC516
TC74HC74AF
IC515
TC7W02F
IC509
TC74HC125AF
IC510
TC74HC125AF
IC512
TC74HC74AF
IC511
TC7W02F
IC515
TC7W02F
IC511
TC7W02F
IDCS
CLK2
IDS1
XY15
XY14
MC0
MC1
SNS0
SNS1
XSST
SNS2
DRX
DTX
XCLP
XLCH
XSWAP
OE2
GNDD
V+5D
VSWD12
GND12

3.23 VMDB BOARD ASSY (1/3)

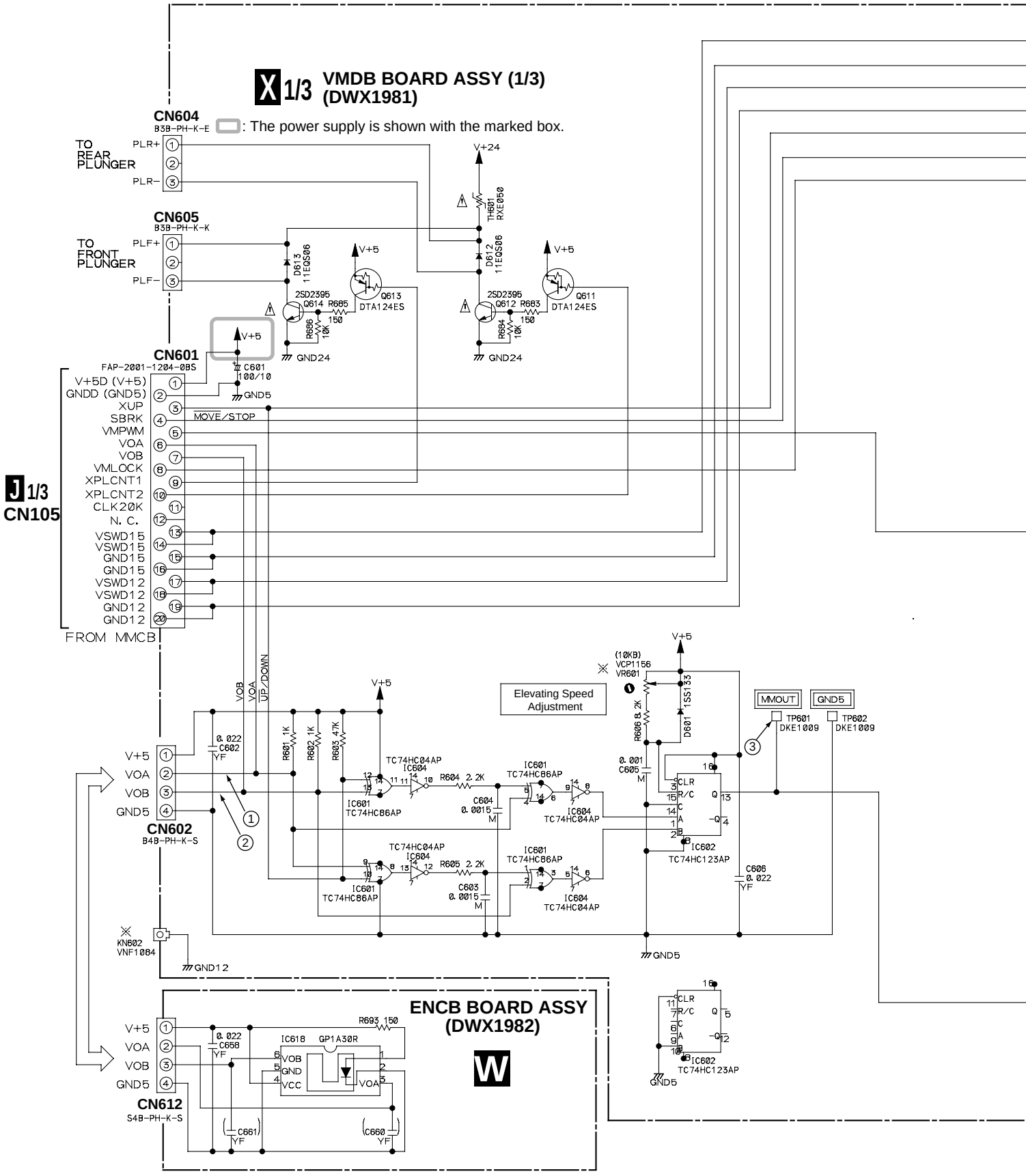

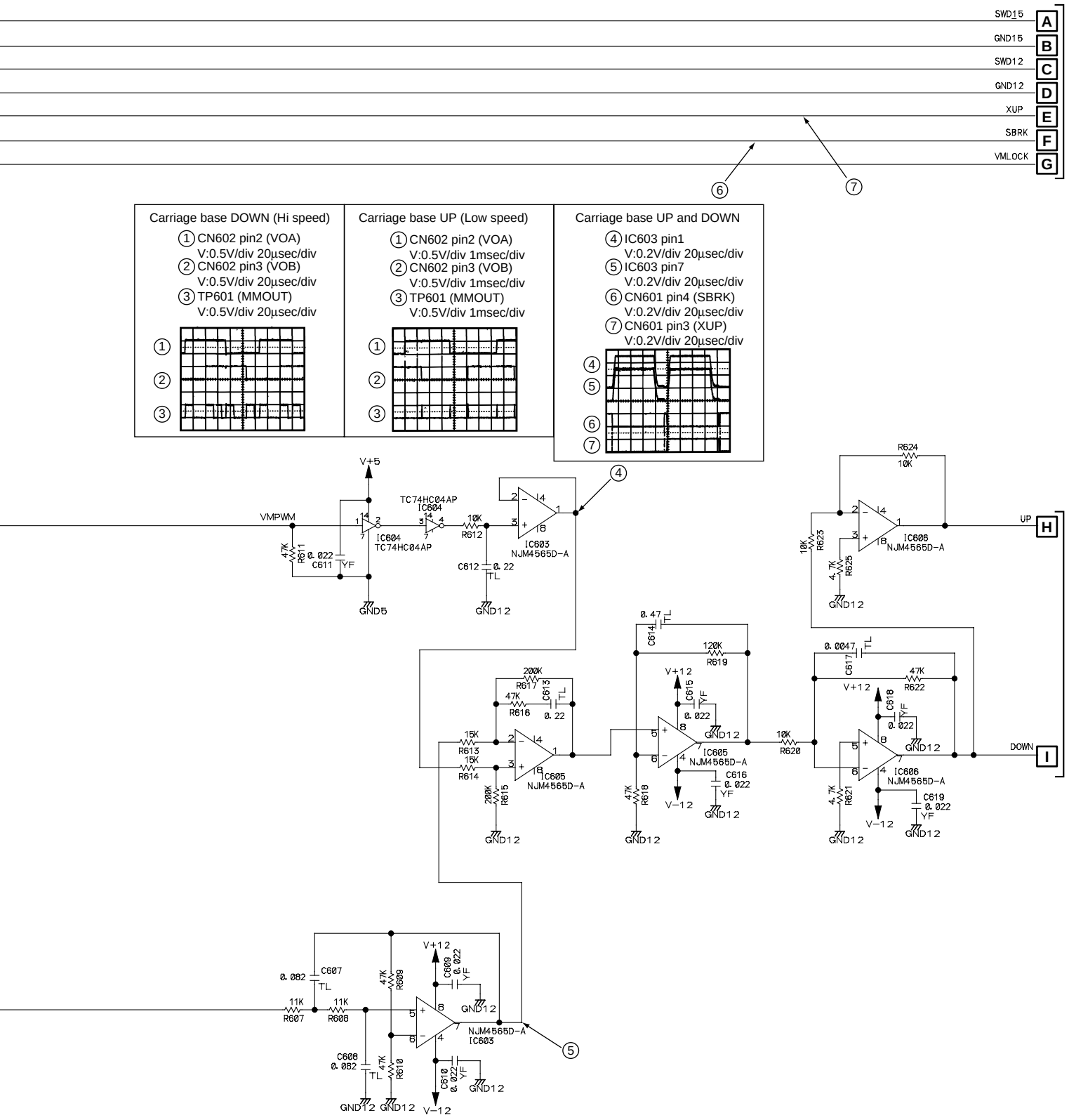
SWD15
GND15
SWD12
GND12
XUP
SBRK
VMLOCK
A
B
C
D
E
F
G
X 2/3
X 2/3
Carriage base DOWN (Hi speed)
① CN602 pin2 (VOA)
V:0.5V/div 20µsec/div
② CN602 pin3 (VOB)
V:0.5V/div 20µsec/div
③ TP601 (MMOUT)
V:0.5V/div 20µsec/div
Carriage base UP (Low speed)
① CN602 pin2 (VOA)
V:0.5V/div 1msec/div
② CN602 pin3 (VOB)
V:0.5V/div 1msec/div
③ TP601 (MMOUT)
V:0.5V/div 1msec/div
Carriage base UP and DOWN
④ IC603 pin1
V:0.2V/div 20µsec/div
⑤ IC603 pin7
V:0.2V/div 20µsec/div
⑥ CN601 pin4 (SBRK)
V:0.2V/div 20µsec/div
⑦ CN601 pin3 (XUP)
V:0.2V/div 20µsec/div
V+5
VMPWM
TC74HC04AP
IC604
47K
R611
0.022
C611
YF
GND5
10K
R612
C612
0.22
TL
GND12
IC603
NJM4565D-A
R624
10K
UP
H
IC606
NJM4565D-A
10K
R623
4.7K
R625
GND12
0.47
C614
TL
120K
R619
200K
R617
47K
R616
C613
0.22
15K
R613
15K
R614
200K
R615
IC605
NJM4565D-A
V+12
C615
0.022
YF
GND12
47K
R618
V-12
C616
0.022
YF
10K
R620
0.0047
C617
47K
R622
C618
0.022
4.7K
R621
C619
0.022
DOWN
I
0.082
C607
TL
11K
R607
11K
R608
47K
R609
C609
0.022
C608
0.082
47K
R610
C610
0.022
NJM4565D-A
IC603
⑤
④
⑥
⑦

3.24 VMDB BOARD ASSY (2/3)

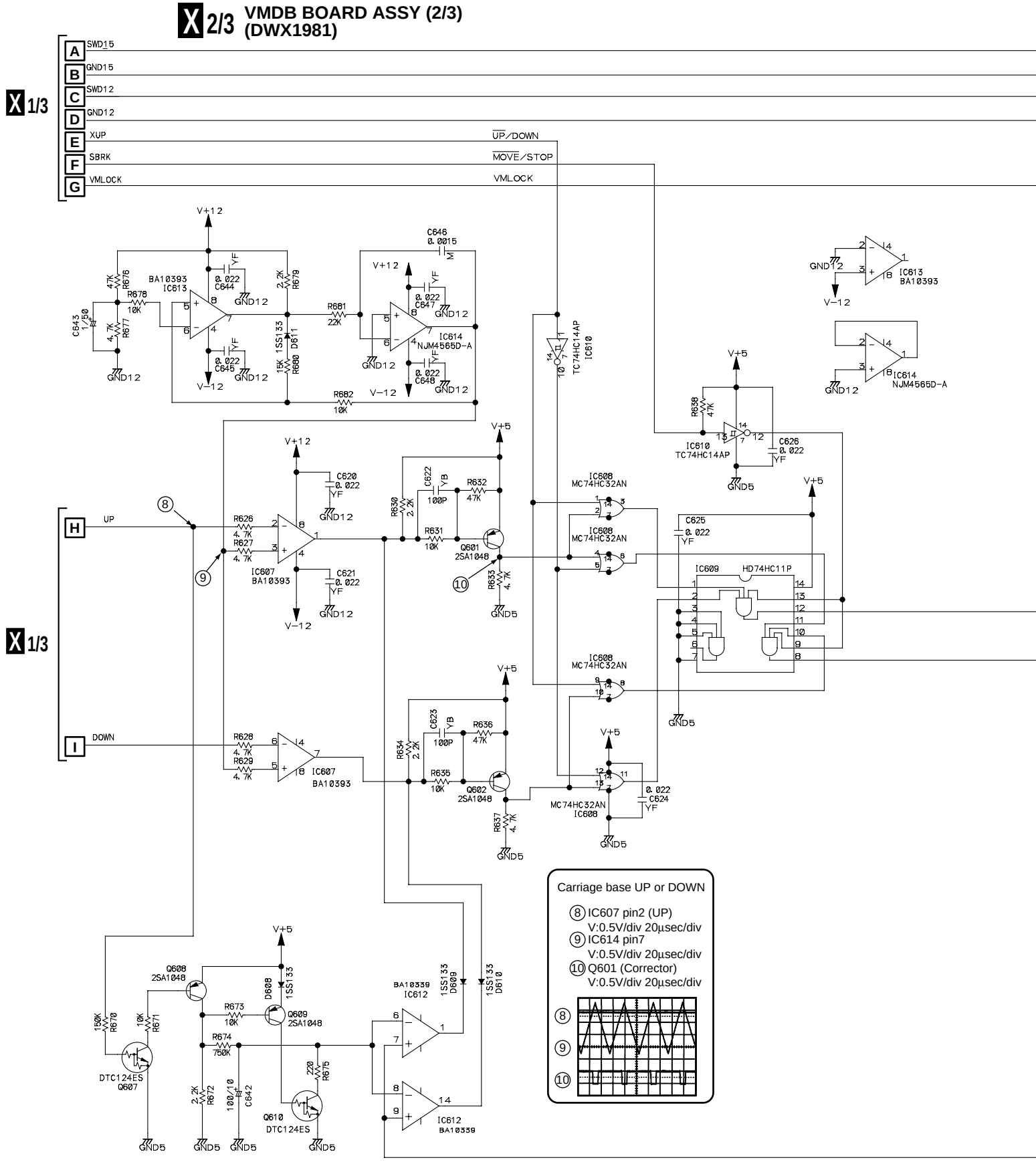

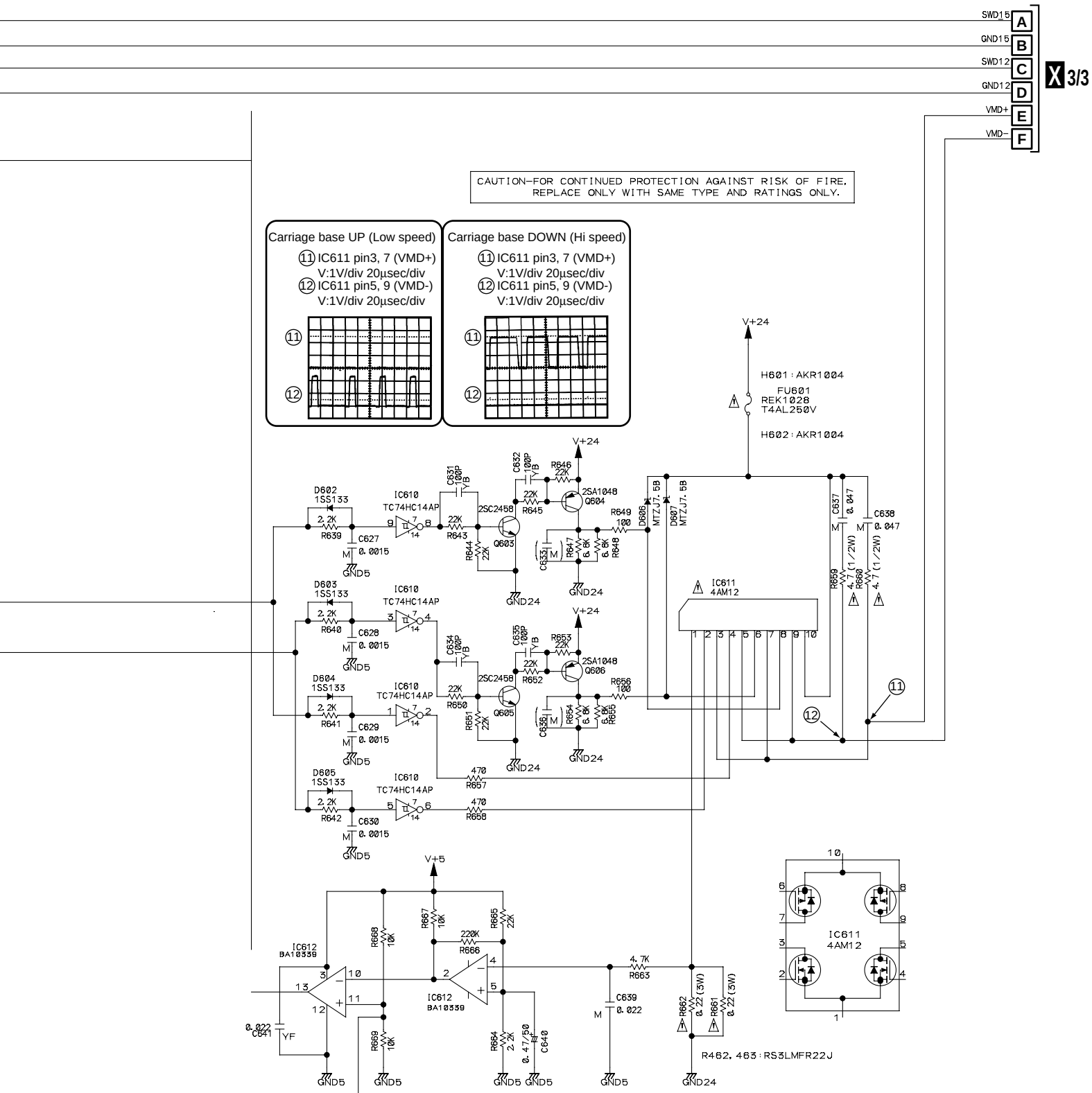
SWD15
GND15
SWD12
GND12
VMD+
VMD-
X 3/3
CAUTION–FOR CONTINUED PROTECTION AGAINST RISK OF FIRE, REPLACE ONLY WITH SAME TYPE AND RATINGS ONLY.
Carriage base UP (Low speed)
⑪ IC611 pin3, 7 (VMD+) V:1V/div 20µsec/div
⑫ IC611 pin5, 9 (VMD-) V:1V/div 20µsec/div
Carriage base DOWN (Hi speed)
⑪ IC611 pin3, 7 (VMD+) V:1V/div 20µsec/div
⑫ IC611 pin5, 9 (VMD-) V:1V/div 20µsec/div
V+24
H601 : AKR1004
FU601 REK1028 T4AL250V
H602 : AKR1004
IC610 TC74HC14AP
IC611 4AM12
IC612 BA10339
V+5
GND5
GND24
R462, 463 : RS3LMFR22J

3.25 VMDB BOARD ASSY (3/3)

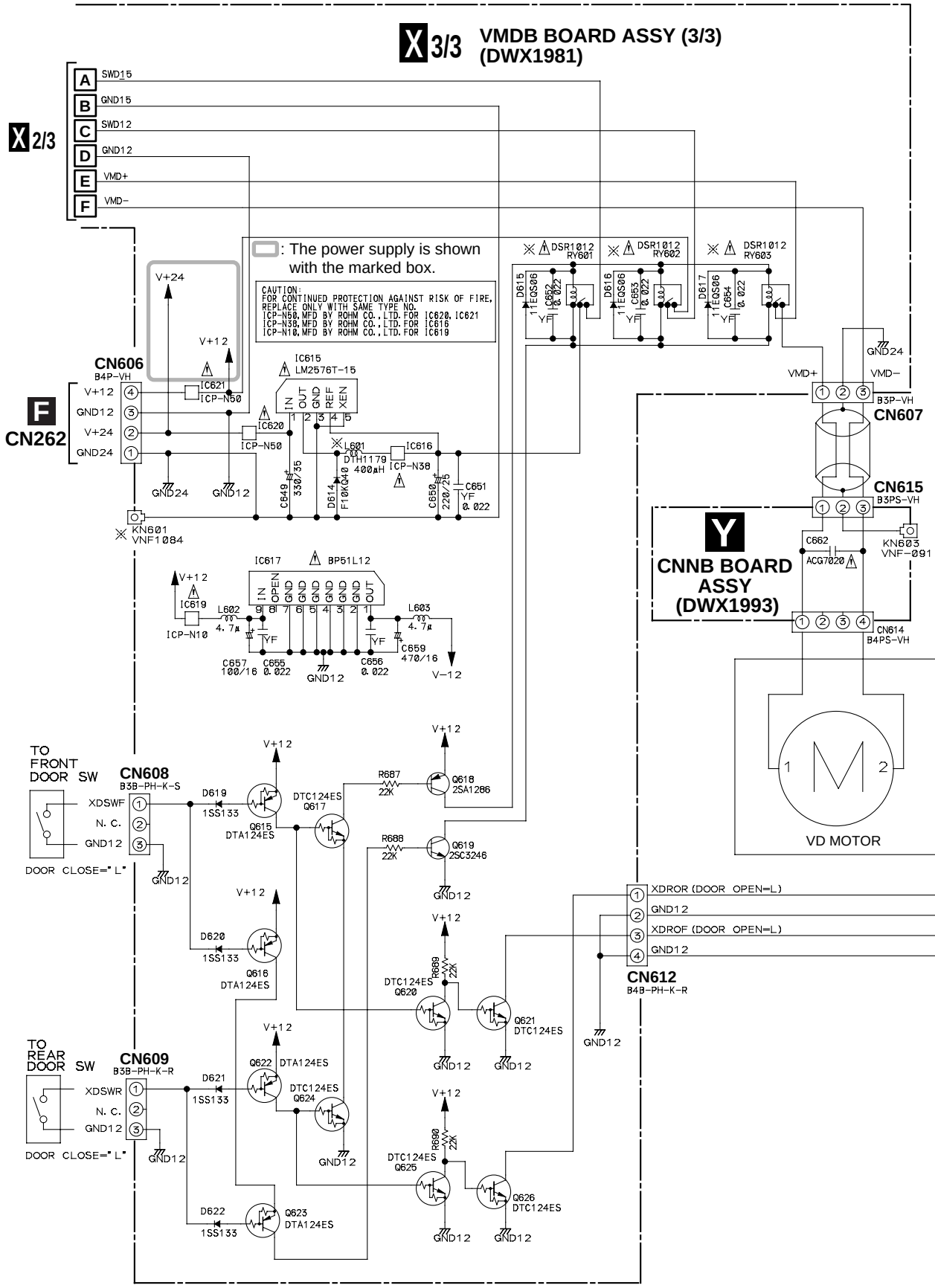

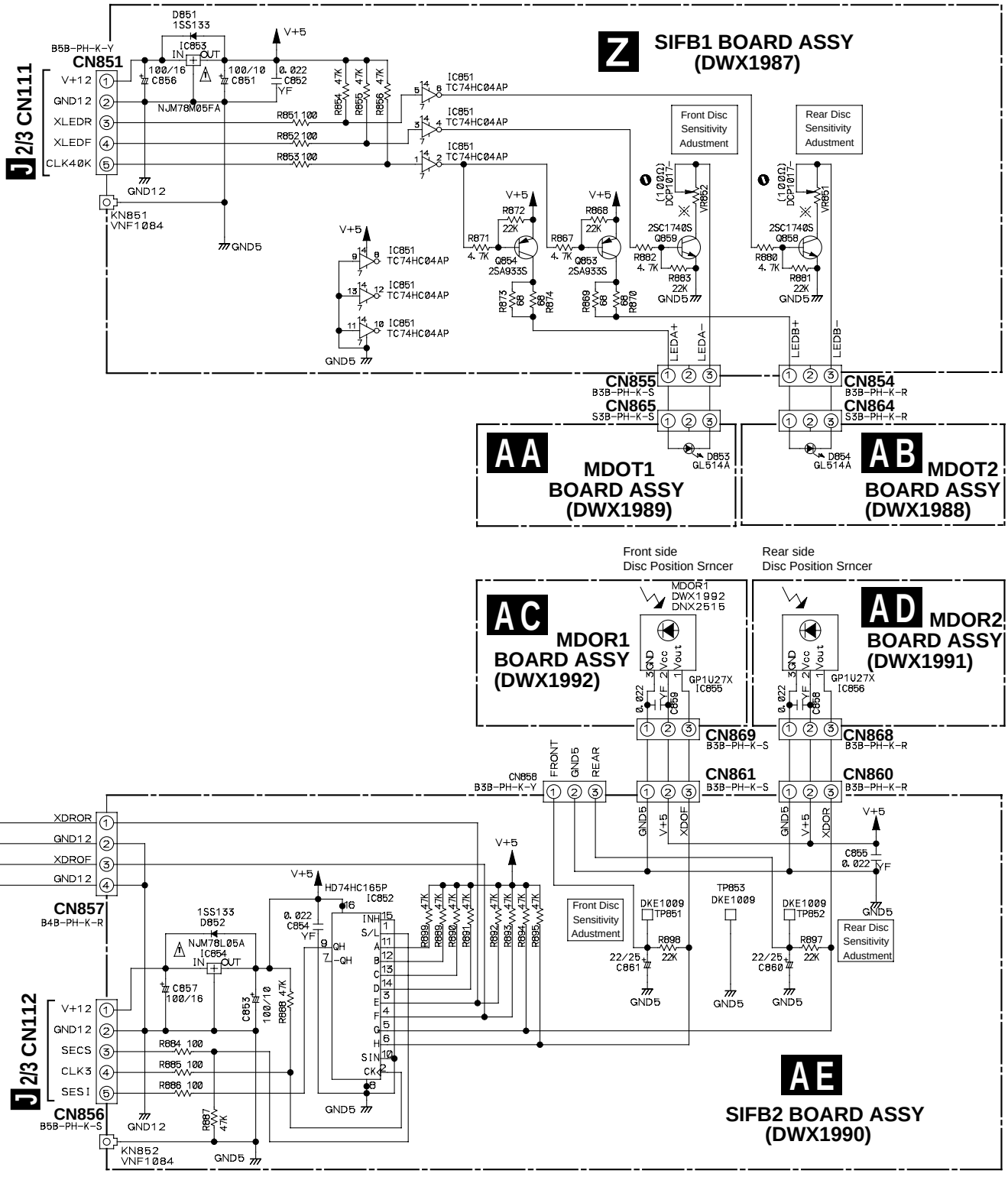
Z SIFB1 BOARD ASSY (DWX1987)
J 2/3 CN111
CN851
B5B-PH-K-Y
V+12
GND12
XLEDR
XLEDF
CLK40K
NJM78M05FA
KN851 VNF1084
IC851 TC74HC04AP
Front Disc Sensitivity Adustment
Rear Disc Sensitivity Adustment
2SC1740S
2SA933S
LEDA+
LEDA-
LEDB+
LEDB-
CN855 B3B-PH-K-S
CN865 S3B-PH-K-S
CN854 B3B-PH-K-R
CN864 S3B-PH-K-R
D853 GL514A
D854 GL514A
AA MDOT1 BOARD ASSY (DWX1989)
AB MDOT2 BOARD ASSY (DWX1988)
Front side Disc Position Srncer
Rear side Disc Position Srncer
AC MDOR1 BOARD ASSY (DWX1992)
AD MDOR2 BOARD ASSY (DWX1991)
MDOR1 DWX1992 DNX2515
GP1U27X IC855
GP1U27X IC856
CN869 B3B-PH-K-S
CN868 B3B-PH-K-R
CN858 B3B-PH-K-Y
CN861 B3B-PH-K-S
CN860 B3B-PH-K-R
FRONT
REAR
XDROR
XDROF
CN857 B4B-PH-K-R
J 2/3 CN112
CN856 B5B-PH-K-S
KN852 VNF1084
NJM78L05A IC854
HD74HC165P IC852
Front Disc Sensitivity Adustment
Rear Disc Sensitivity Adustment
TP851 DKE1009
TP853 DKE1009
TP852 DKE1009
AE SIFB2 BOARD ASSY (DWX1990)

3.26 HMIF, MSTB, HMGB and MSDB BOARD ASSYS

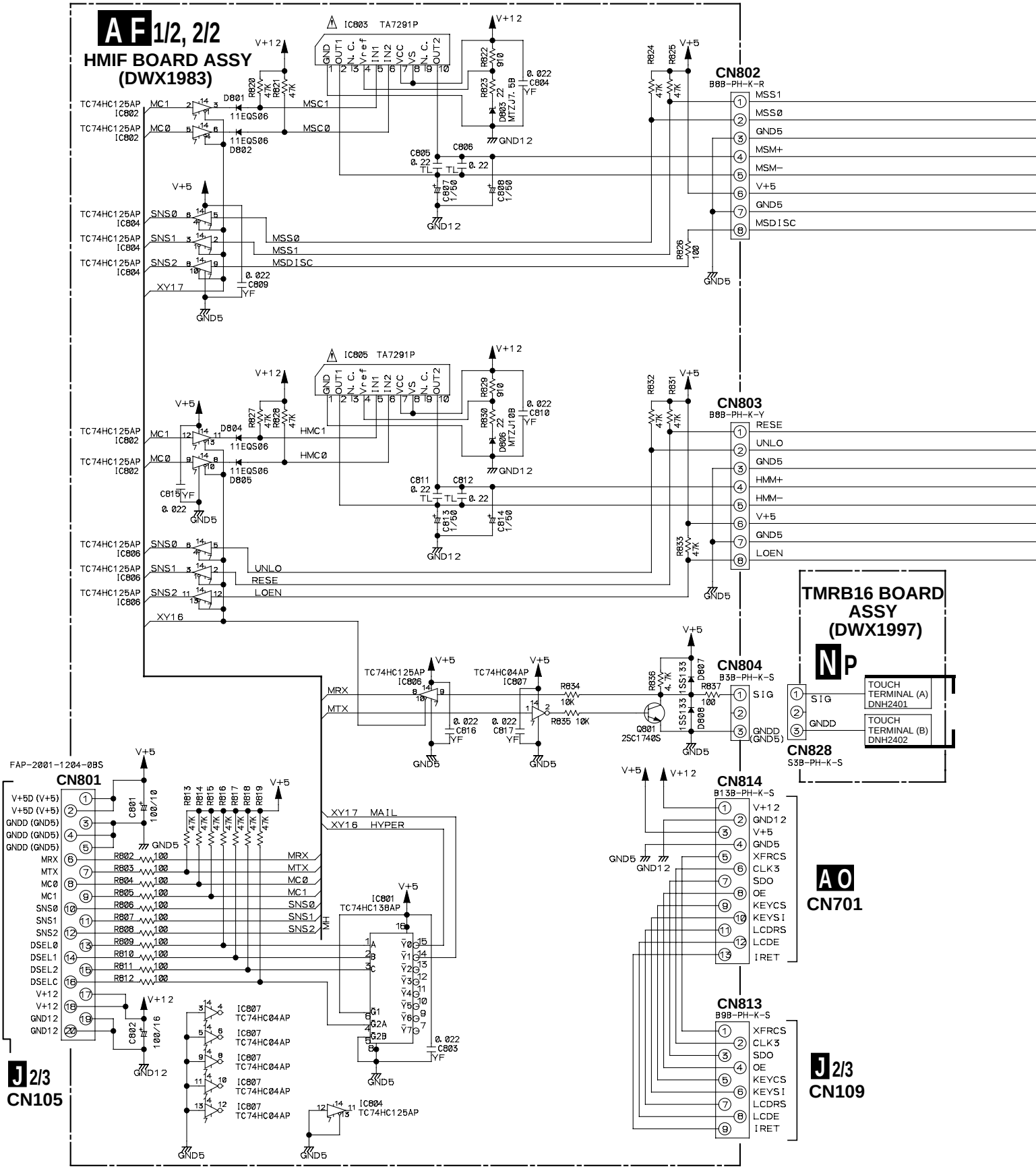

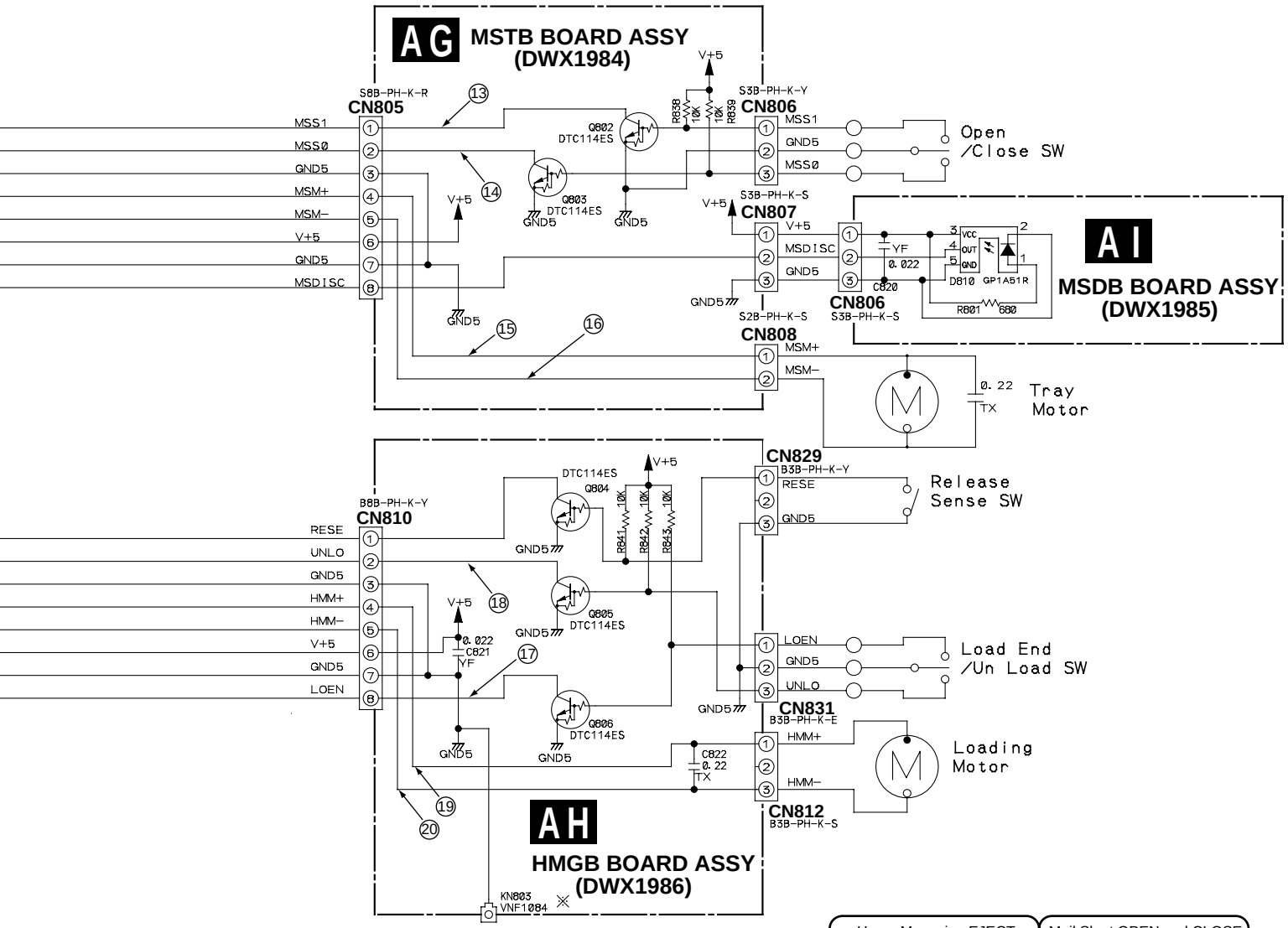

74HC125

INPUT		OUTPUT
$\overline{G}$	A	Y
H	X	Z
L	L	L
L	H	H

TA7291P

INPUT		OUTPUT		
IN1	IN2	OUT1	OUT2	MODE
L	L	Z	Z	STOP
H	L	H	L	CW/CCW
L	H	L	H	CCW/CW
H	H	L	L	BRAKE

74HC138

INPUT				OUTPUT		
$\overline{G2A}$	C	B	A	$\overline{Y0}$	$\overline{Y1}$	$\overline{Y2}$~$\overline{Y7}$
H	X	X	X	H	H	H
L	L	L	L	L	H	H
L	L	L	H	H	L	H

Hyper Magazine EJECT and INSERT

17 CN810 pin8 (LOEN)
V:1V/div 0.5sec/div
18 CN810 pin2 (UNLO)
V:1V/div 0.5sec/div
19 CN810 pin4 (HMM+)
V:1V/div 0.5sec/div
20 CN810 pin5 (HMM-)
V:1V/div 0.5sec/div

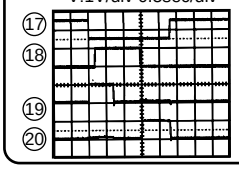

Mail Sloat OPEN and CLOSE

13 CN805 pin1 (MSS1)
V:0.5V/div 0.2sec/div
14 CN805 pin2 (MSS0)
V:0.5V/div 0.2sec/div
15 CN805 pin4 (MSM+)
V:0.5V/div 0.2sec/div
16 CN805 pin5 (MSM-)
V:0.5V/div 0.2sec/div

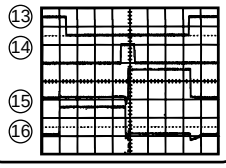

3.27 DCMB1, DCMB2 and DSEB BOARD ASSYS

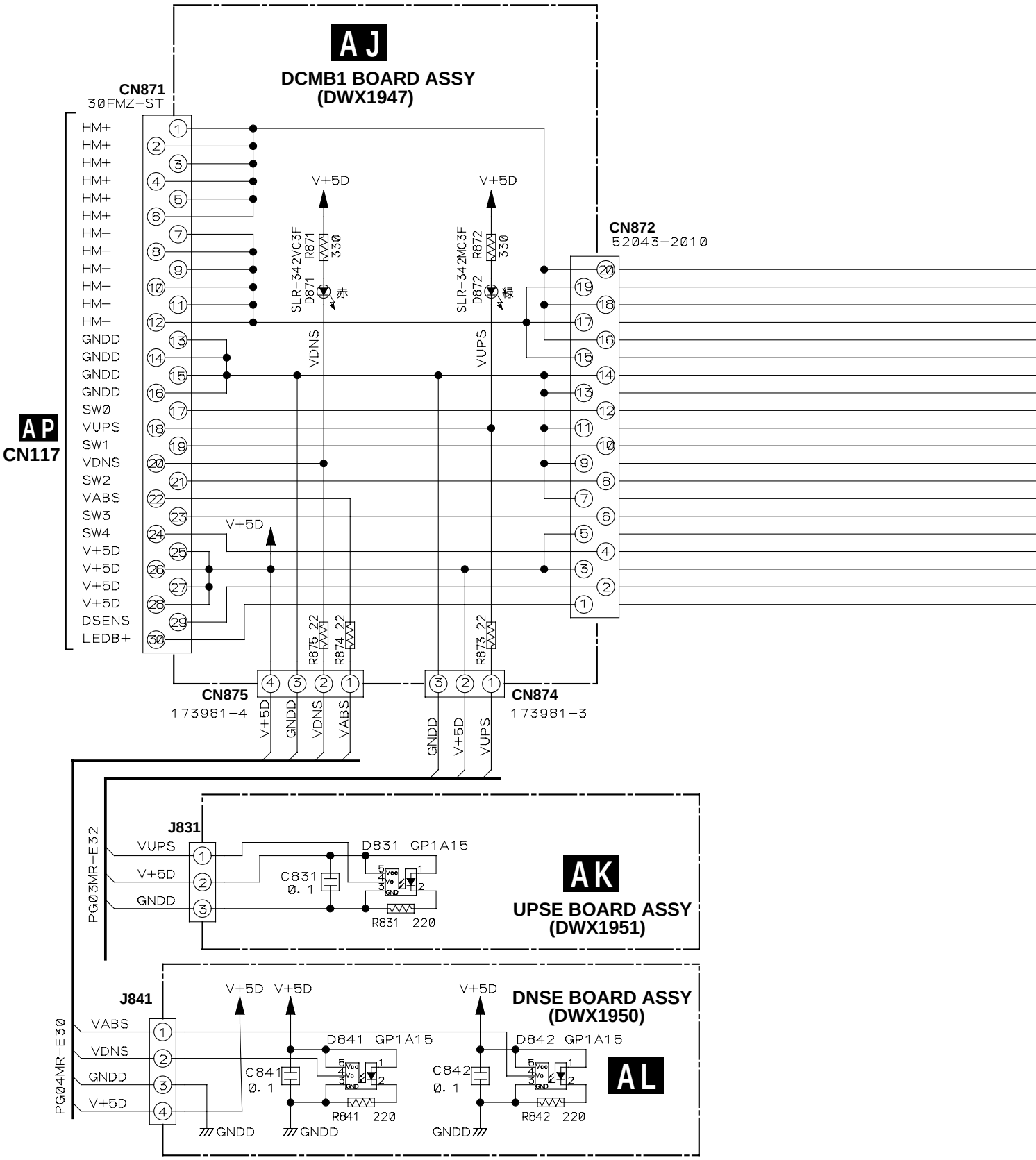

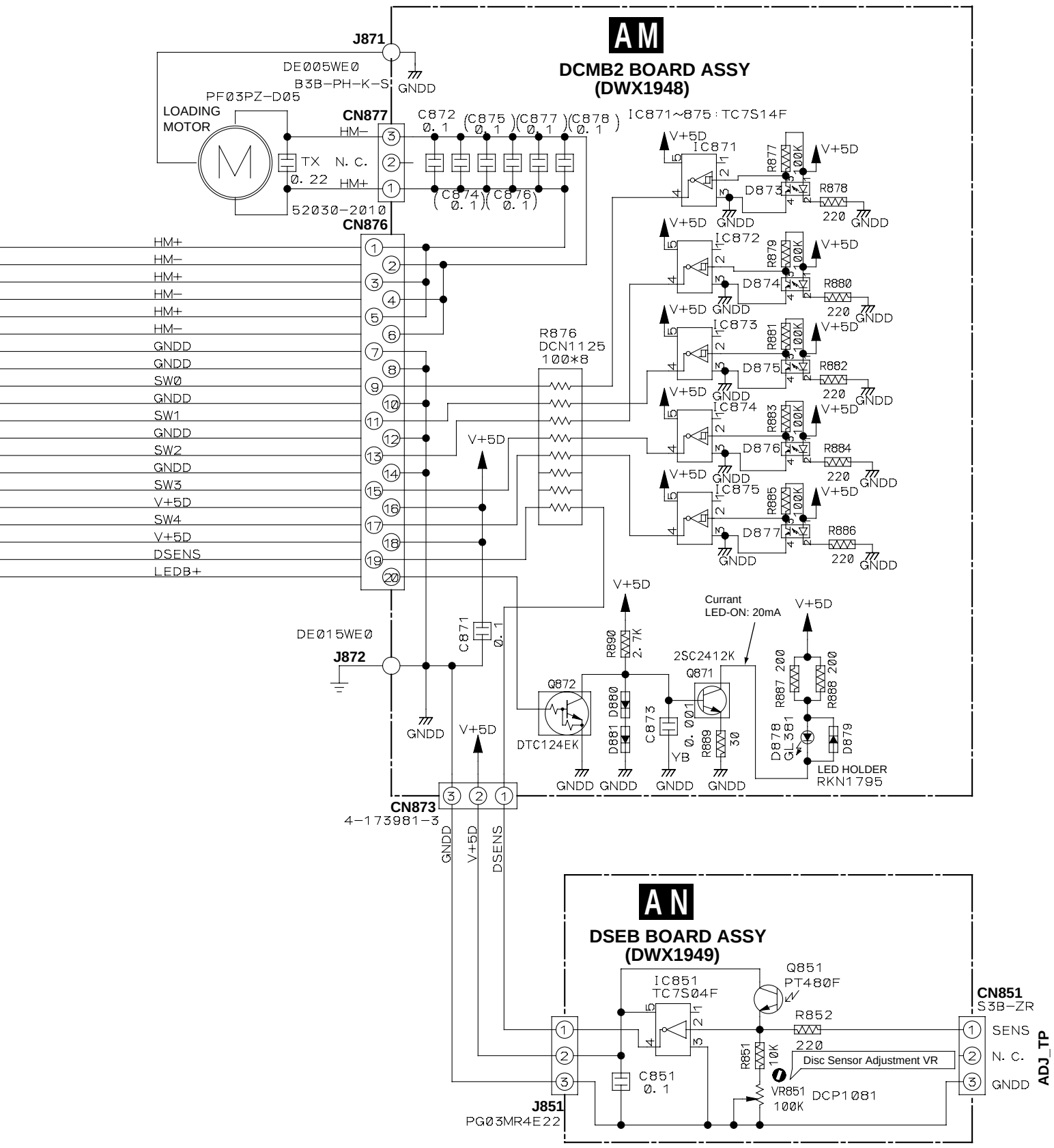
AM
DCMB2 BOARD ASSY
(DWX1948)
J871
DE005WE0
B3B-PH-K-S
PF03PZ-D05
GNDD
LOADING MOTOR
CN877
HM-
TX
N. C.
HM+
Ø. 22
52030-2010
C872 Ø. 1
C875 Ø. 1
C877 Ø. 1
C878 Ø. 1
C874 Ø. 1
C876 Ø. 1
IC871~875 : TC7S14F
CN876
HM+
HM-
HM+
HM-
HM+
HM-
GNDD
GNDD
SW0
GNDD
SW1
GNDD
SW2
GNDD
SW3
V+5D
SW4
V+5D
DSENS
LEDB+
R876
DCN1125
100*8
V+5D
IC871
IC872
IC873
IC874
IC875
R877
R879
R881
R883
R885
100K
D873
D874
D875
D876
D877
R878
R880
R882
R884
R886
220
DE015WE0
J872
C871
Ø. 1
R890
2. 7K
Currant
LED-ON: 20mA
2SC2412K
Q871
Q872
DTC124EK
D880
D881
C873
Ø. 001
YB
R889
30
R887 200
R888 200
D878
GL381
D879
LED HOLDER
RKN1795
CN873
4-173981-3
GNDD
V+5D
DSENS
AN
DSEB BOARD ASSY
(DWX1949)
IC851
TC7S04F
Q851
PT480F
R852
220
R851
10K
Disc Sensor Adjustment VR
C851
Ø. 1
VR851
100K
DCP1081
J851
PG03MR4E22
CN851
S3B-ZR
SENS
N. C.
GNDD
ADJ_TP

3.28 POWER SUPPLAY UNIT (DRM-PW701)

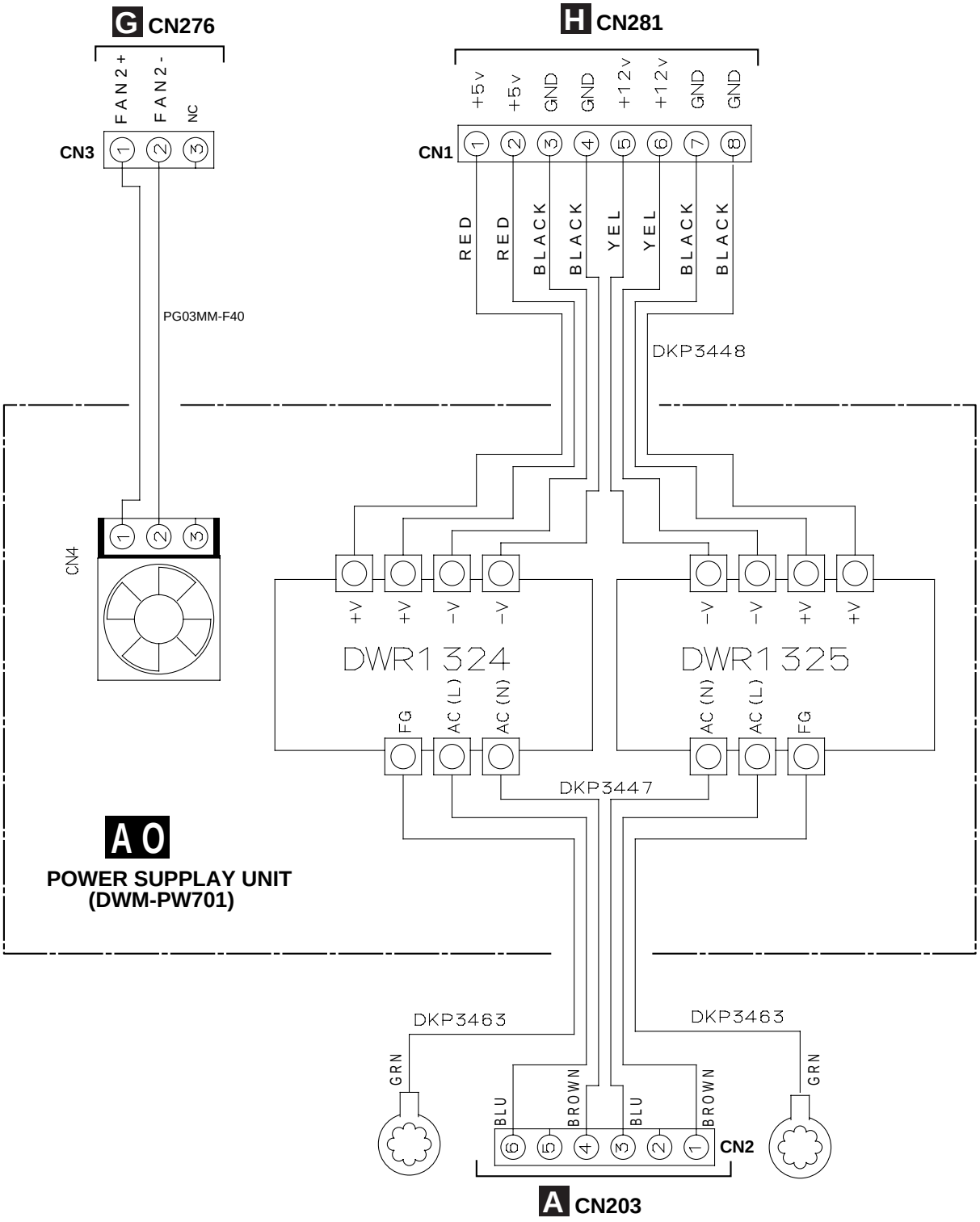

3.29 SW REGULATOR (DWR1324)

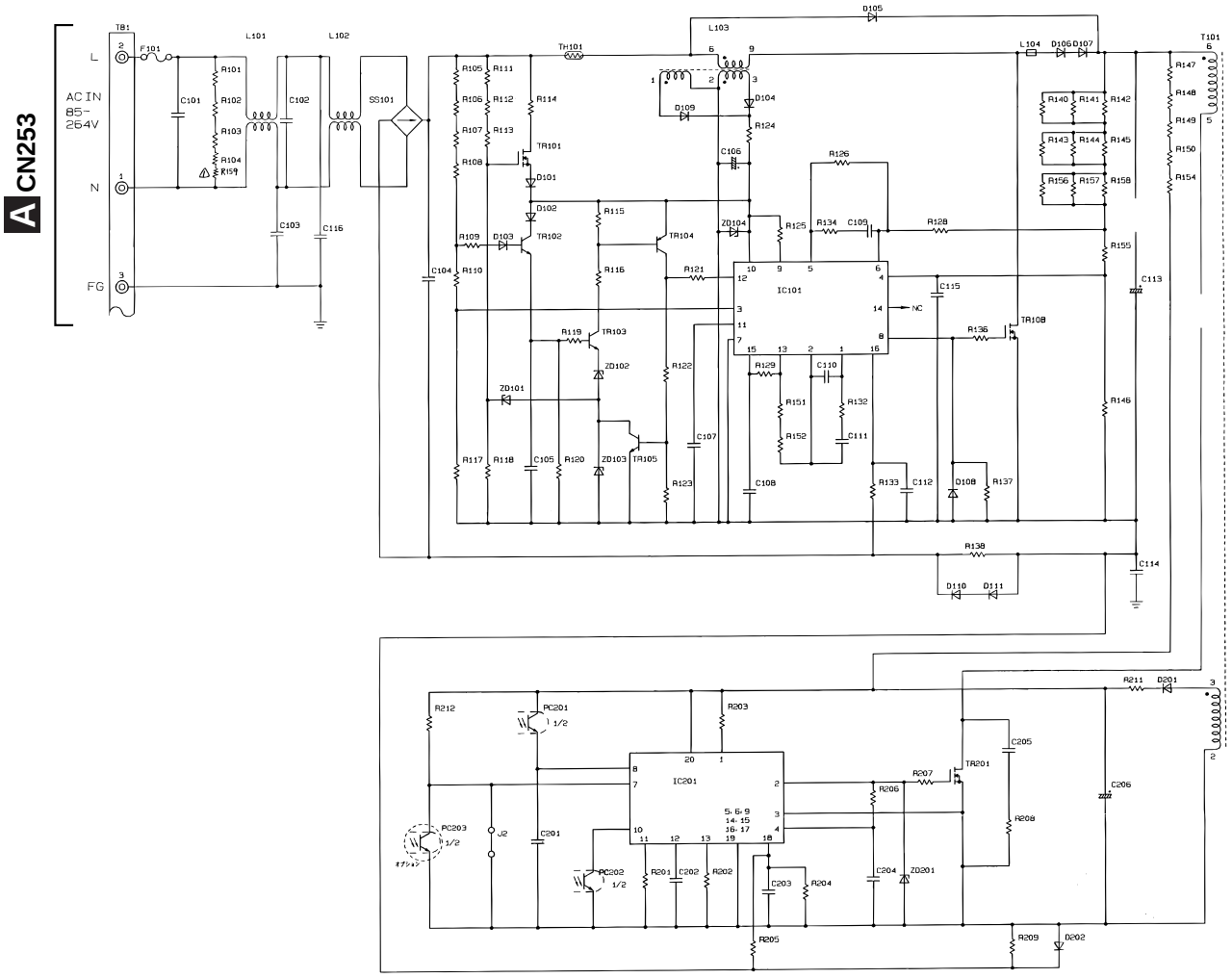

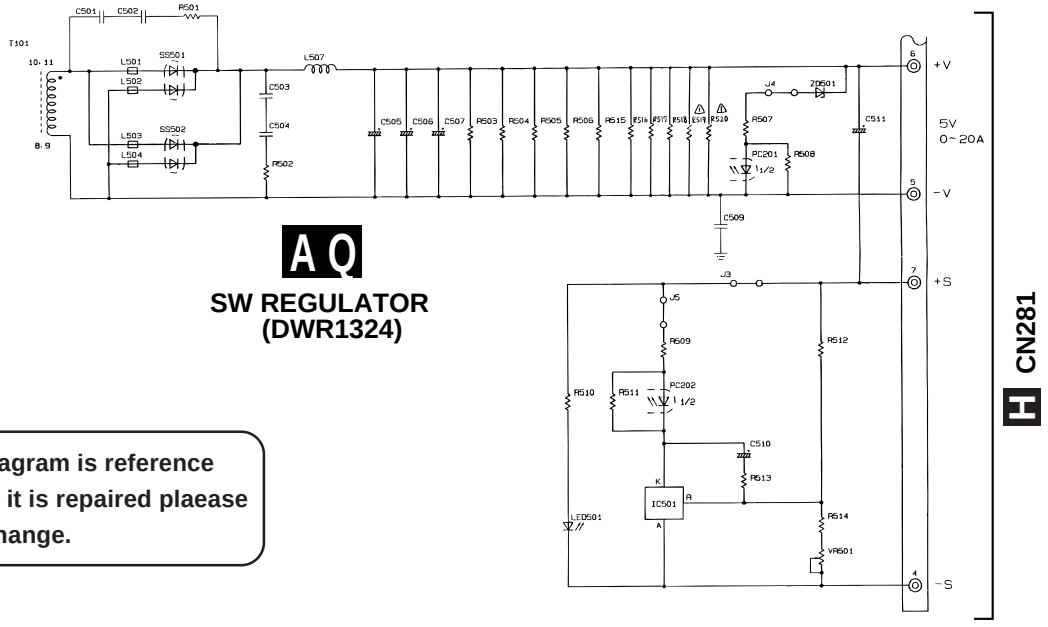

SW REGULATOR (DWR1324)

This schematic diagram is reference information When it is repaired plaease cope by assy exchange.

3.30 SW REGULATOR (DWR1325)

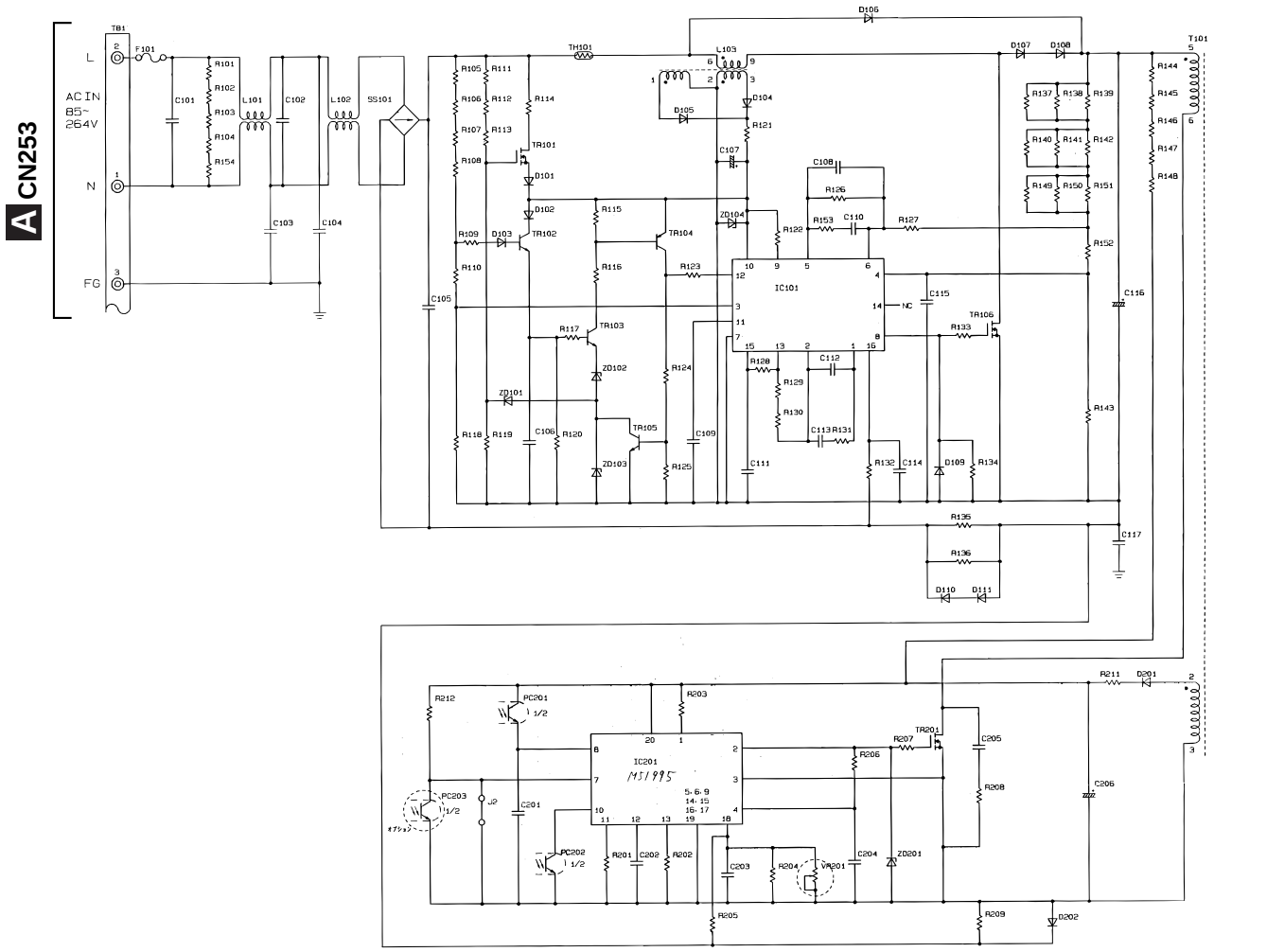

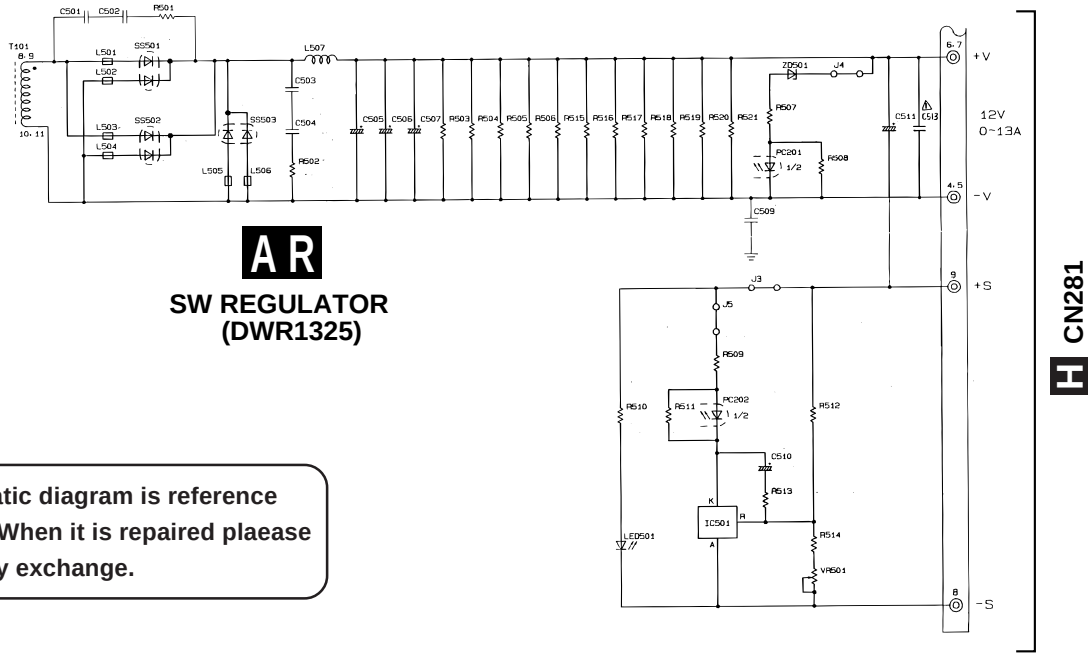

A R

SW REGULATOR
(DWR1325)

This schematic diagram is reference information When it is repaired plaease cope by assy exchange.

4. PCB CONNECTION DIAGRAM

NOTE FOR PCB DIAGRAMS :

1. Part numbers in PCB diagrams match those in the schematic diagrams.
2. A comparison between the main parts of PCB and schematic diagrams is shown below.

Symbol In PCB Diagrams	Symbol In Schematic Diagrams	Part Name
B C E	B C E B C E	Transistor
B C E	B C E B C E	Transistor with resistor
D G S	D G S D G S	Field effect transistor
		Resistor array
		3-terminal regulator

3. The parts mounted on this PCB include all necessary parts for several destinations.
   For further information for respective destinations, be sure to check with the schematic diagram.
4. View point of PCB diagrams.

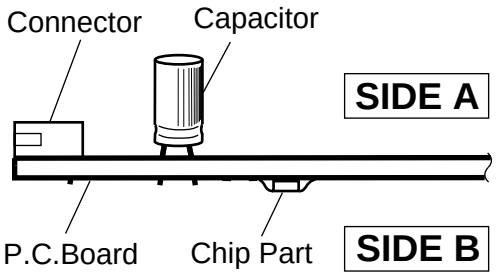

4.1 ACFB and PFCB BOARD ASSYS

A ACFB BOARD ASSY

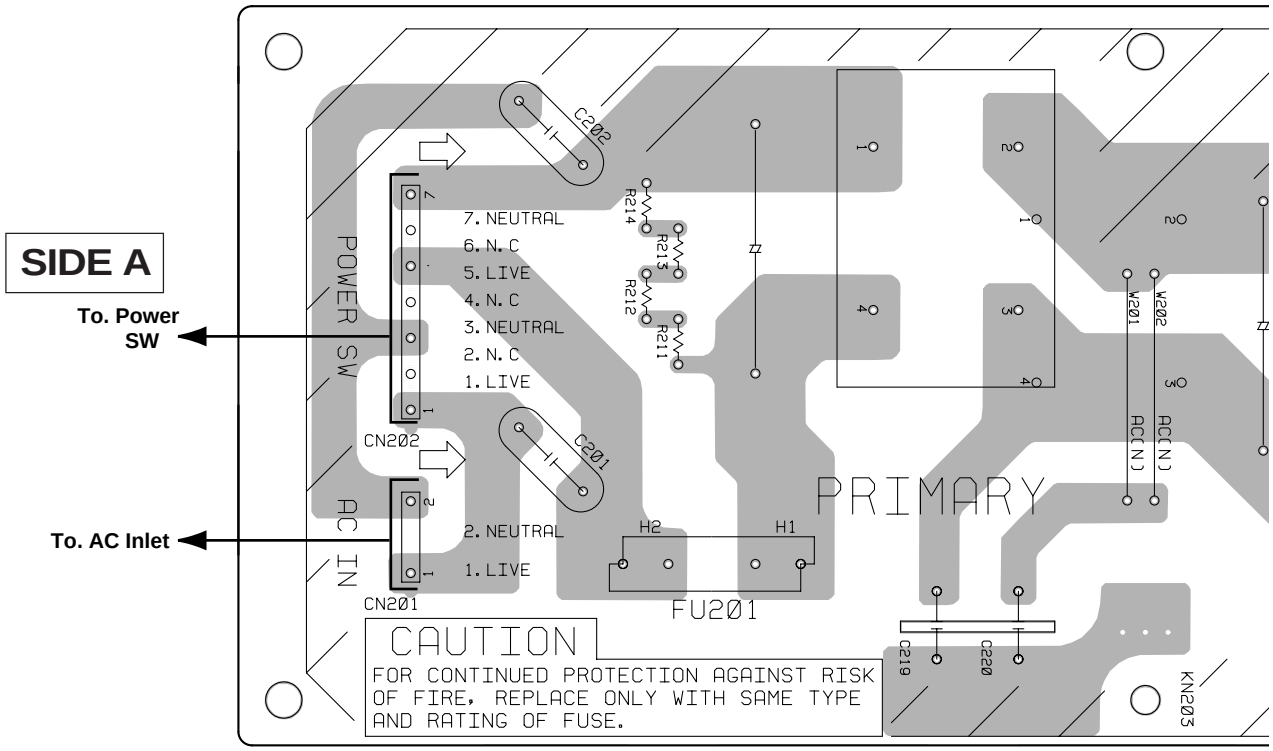

B PFCB BOARD ASSY

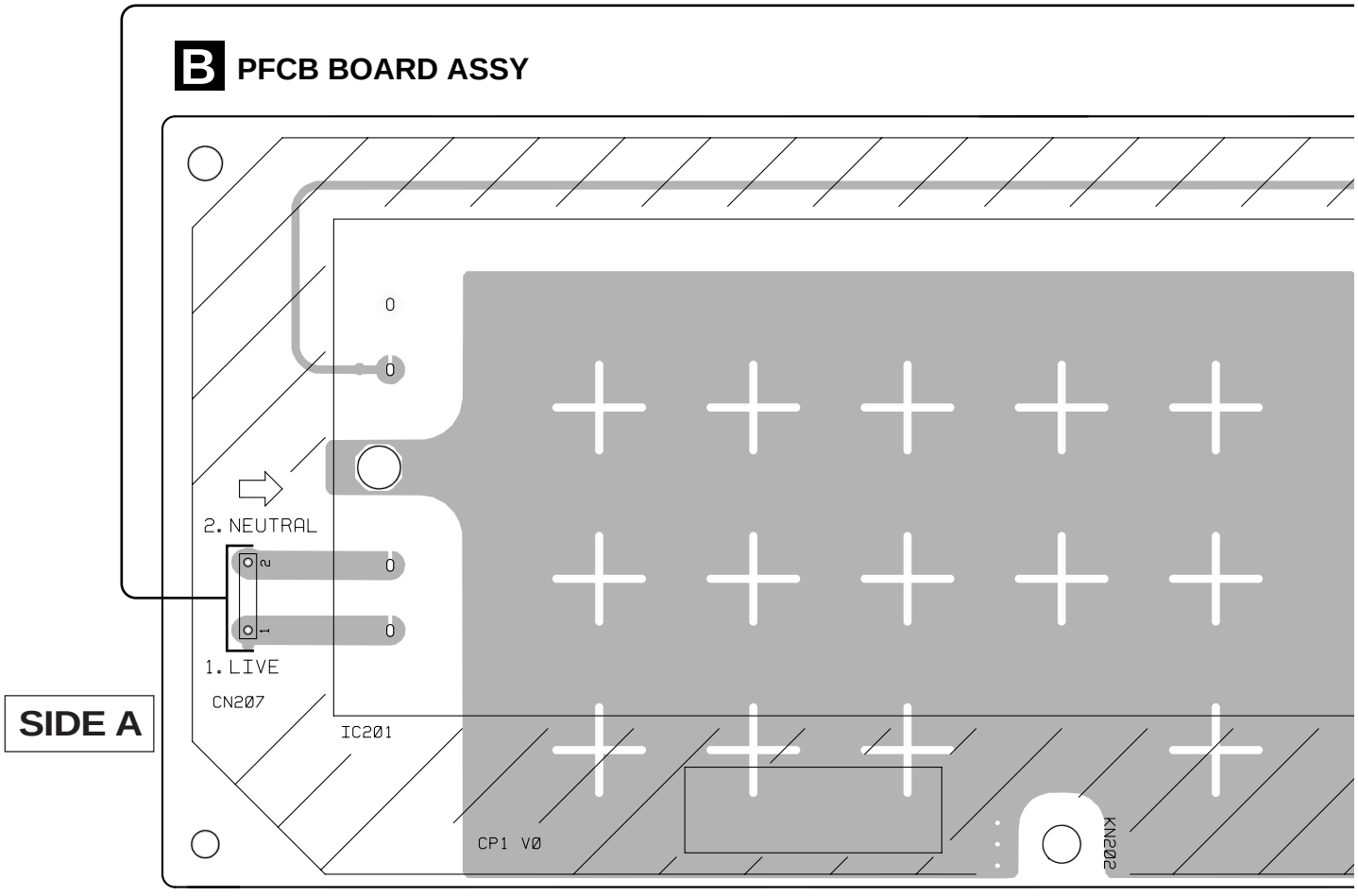

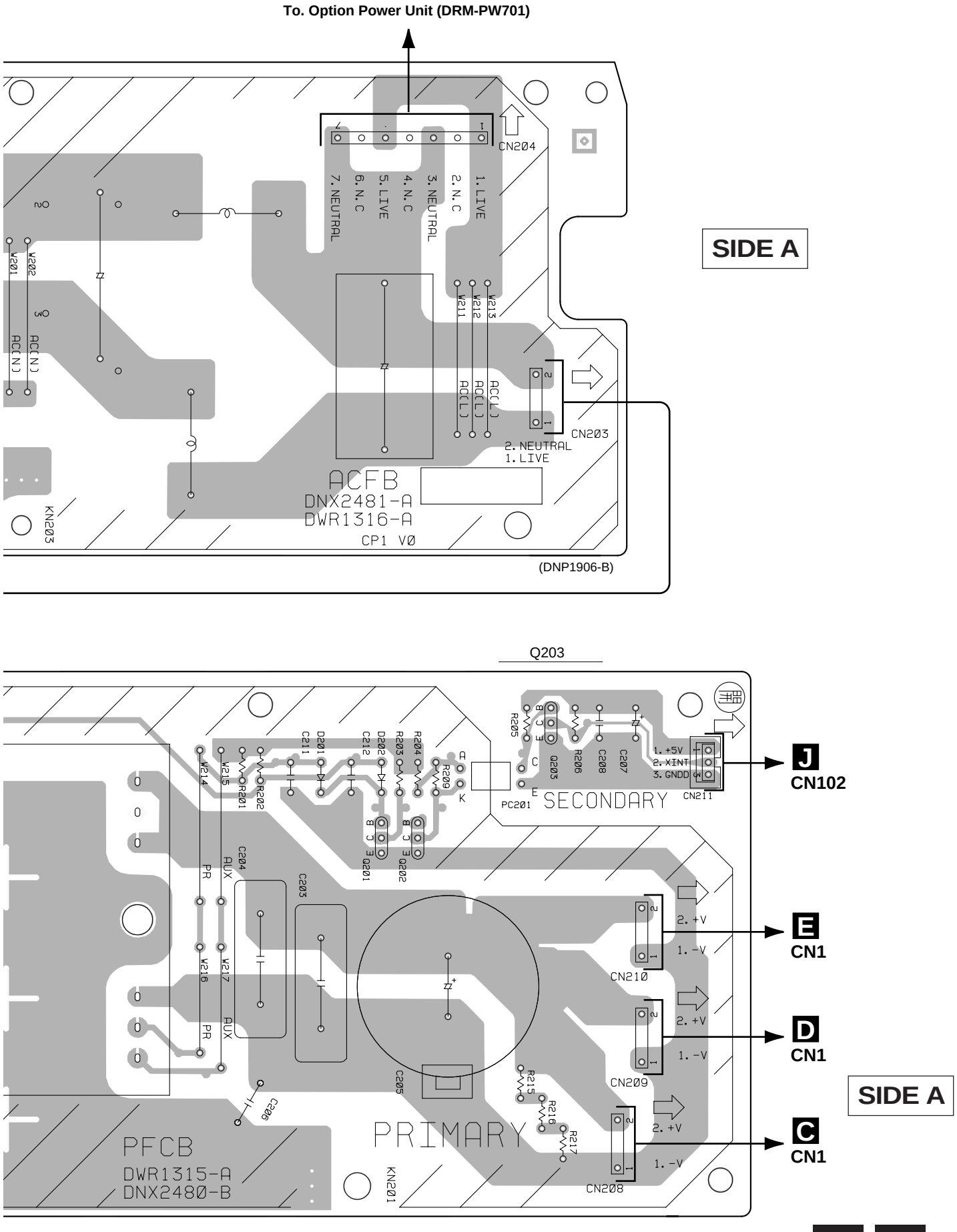
To. Option Power Unit (DRM-PW701)
CN204
7. NEUTRAL
6. N.C
5. LIVE
4. N.C
3. NEUTRAL
2. N.C
1. LIVE
W201
W202
W211
W212
W213
AC(N)
AC(L)
CN203
2. NEUTRAL
1. LIVE
ACFB
DNX2481-A
DWR1316-A
CP1 V0
KN203
(DNP1906-B)
SIDE A
Q203
R205
Q203
R206
C208
C207
1. +5V
2. XINT
3. GNDD
CN211
J
CN102
PC201
SECONDARY
D201
C211
D202
C212
R204
R203
R209
Q201
Q202
W214
W215
R201
R202
C204
AUX
PR
C203
W216
W217
C205
C206
R215
R216
R217
2. +V
1. -V
CN210
E
CN1
CN209
D
CN1
CN208
C
CN1
PRIMARY
PFCB
DWR1315-A
DNX2480-B
KN201
SIDE A

4.2 PIF1 and PIF2 BOARD ASSYS

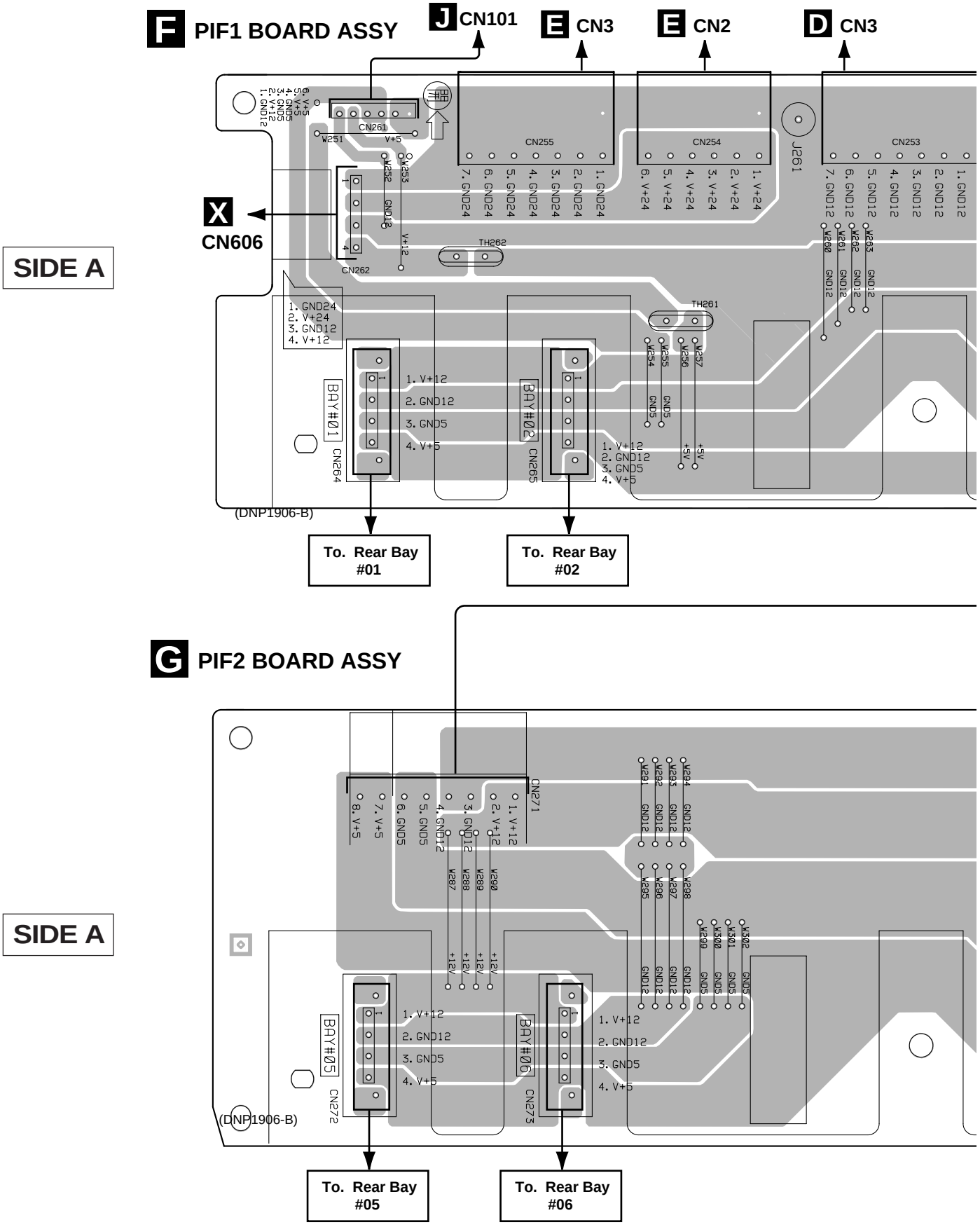

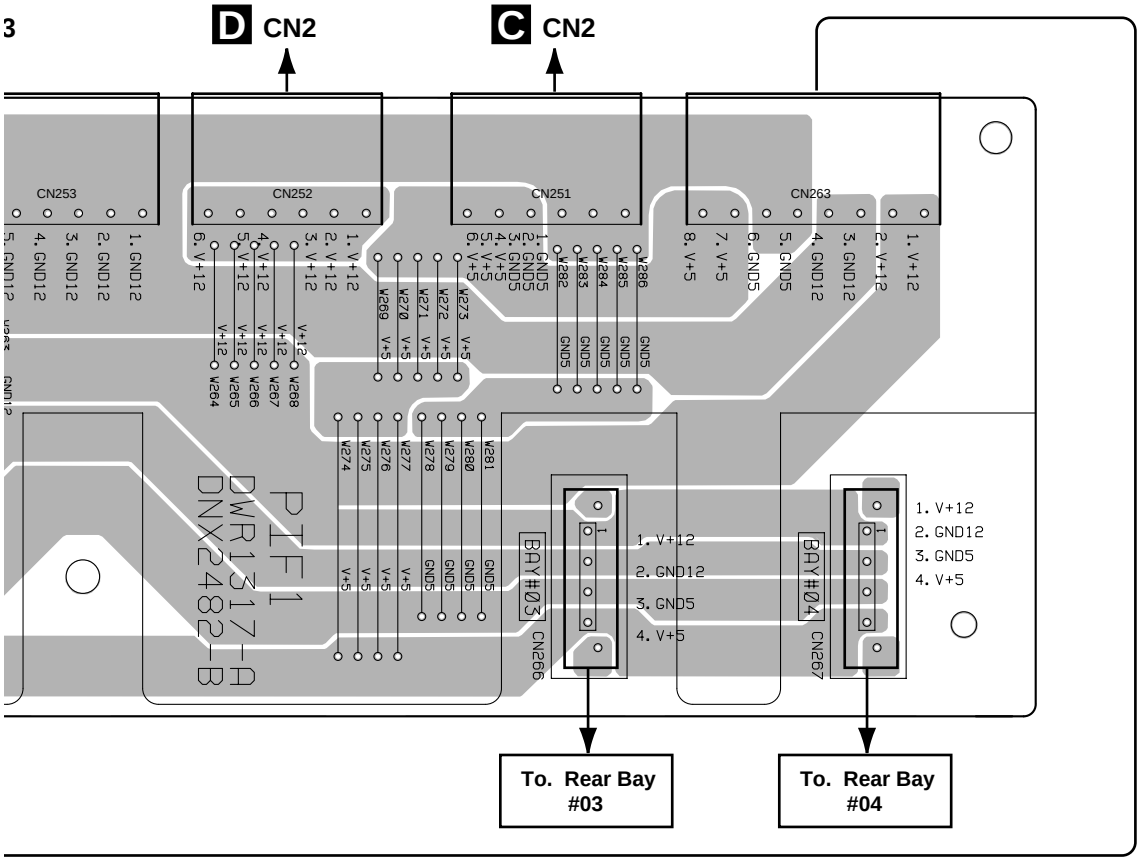
D CN2
C CN2
CN253
CN252
CN251
CN263
PIF1
DWR1317-A
DNX2482-B
BAY#03
CN266
BAY#04
CN267
1. V+12
2. GND12
3. GND5
4. V+5
To. Rear Bay #03
To. Rear Bay #04

SIDE A

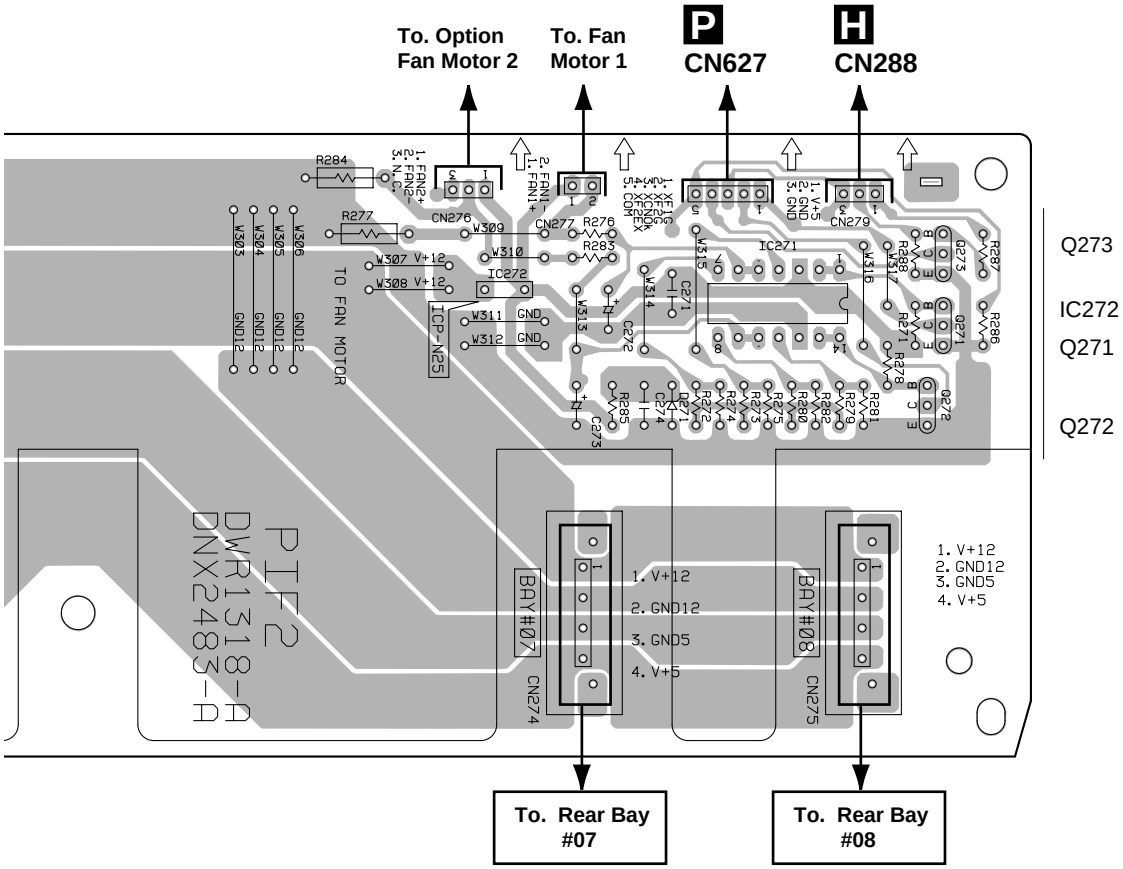
To. Option Fan Motor 2
To. Fan Motor 1
P CN627
H CN288
TO FAN MOTOR
ICP-N25
IC271
IC272
Q273
Q271
Q272
PIF2
DWR1318-A
DNX2483-B
BAY#07
CN274
BAY#08
CN275
1. V+12
2. GND12
3. GND5
4. V+5
To. Rear Bay #07
To. Rear Bay #08

SIDE A

4.3 PIF3 and PIF4 BOARD ASSYS

H PIF 3 BOARD ASSY

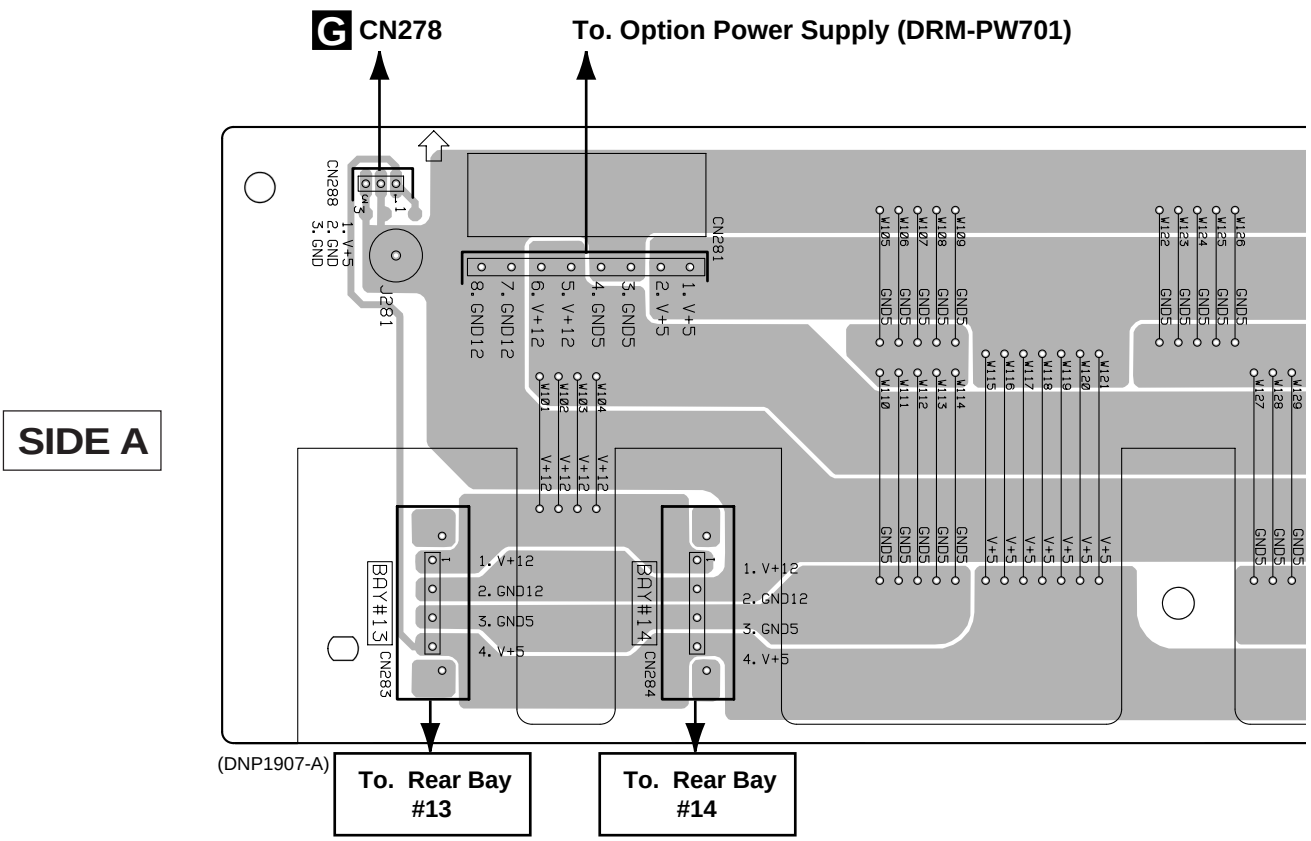

I PIF 4 BOARD ASSY

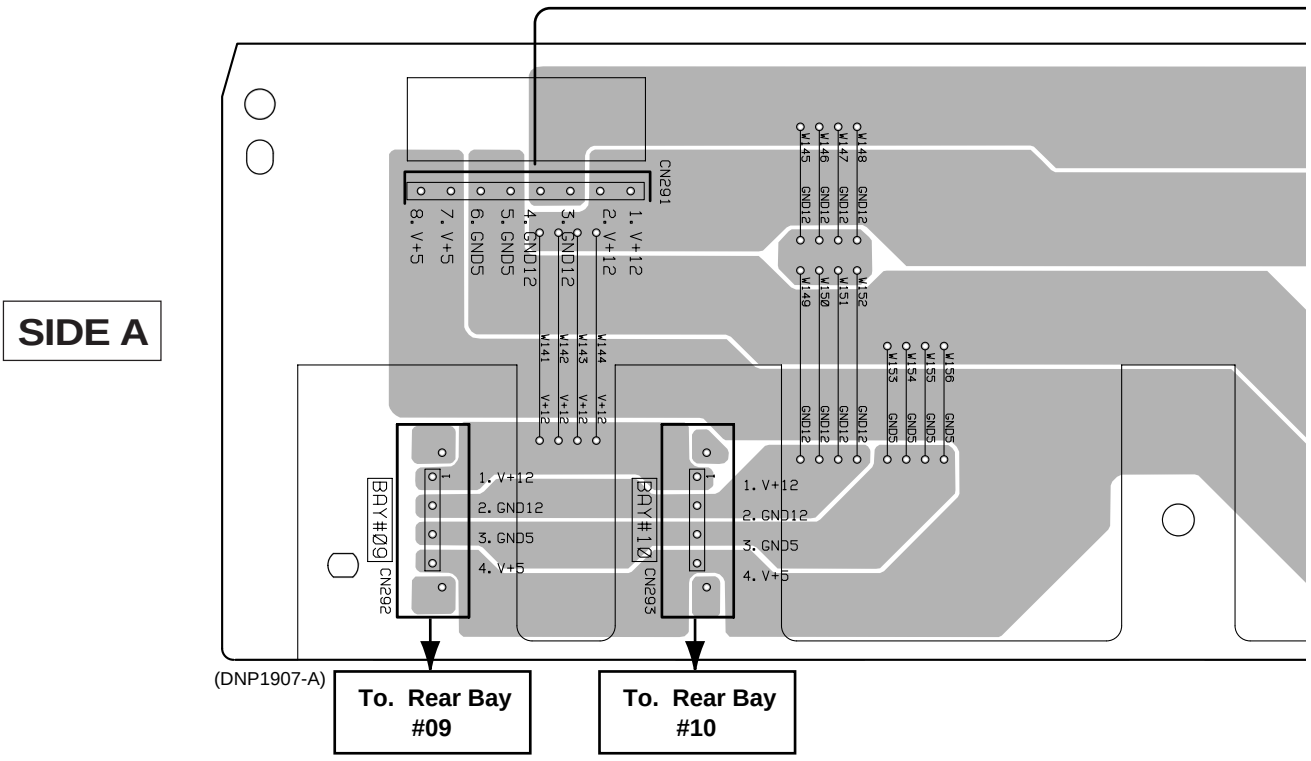

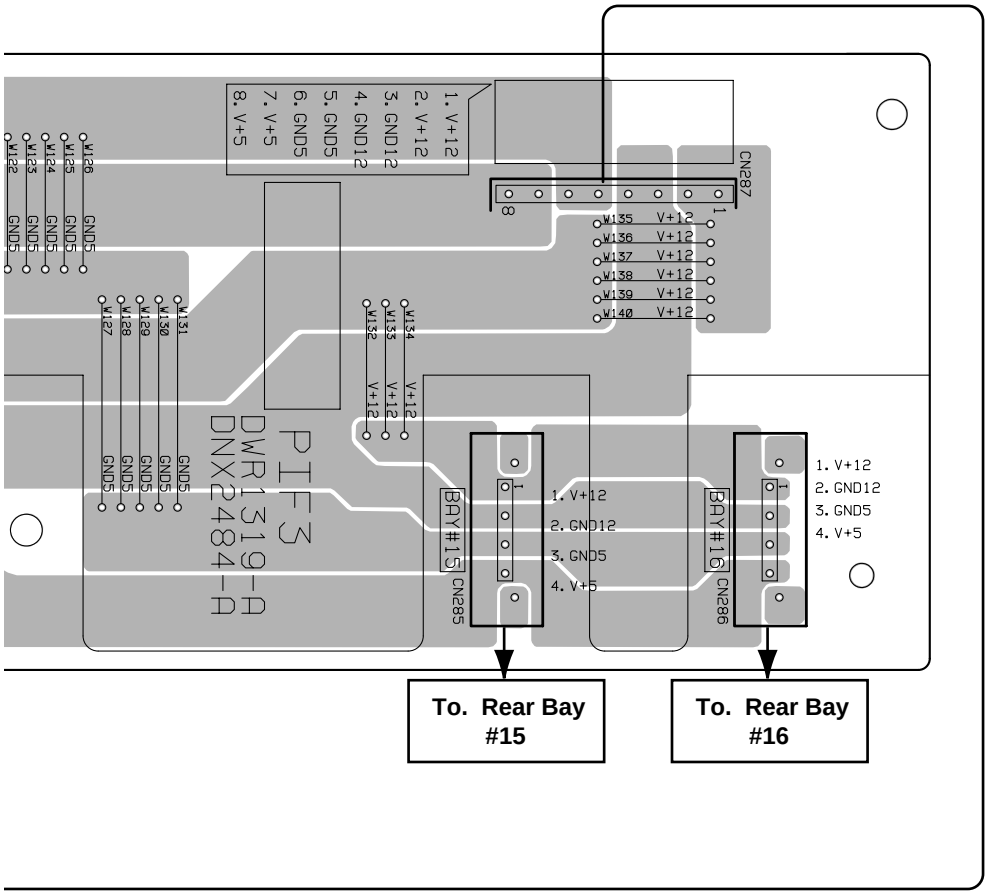
1. V+12
2. V+12
3. GND12
4. GND12
5. GND5
6. GND5
7. V+5
8. V+5
CN287
W135 V+12
W136 V+12
W137 V+12
W138 V+12
W139 V+12
W140 V+12
PTF3
DWR1319-A
DNX2484-A
BAY#15 CN285
BAY#16 CN286
1. V+12
2. GND12
3. GND5
4. V+5
To. Rear Bay #15
To. Rear Bay #16

SIDE A

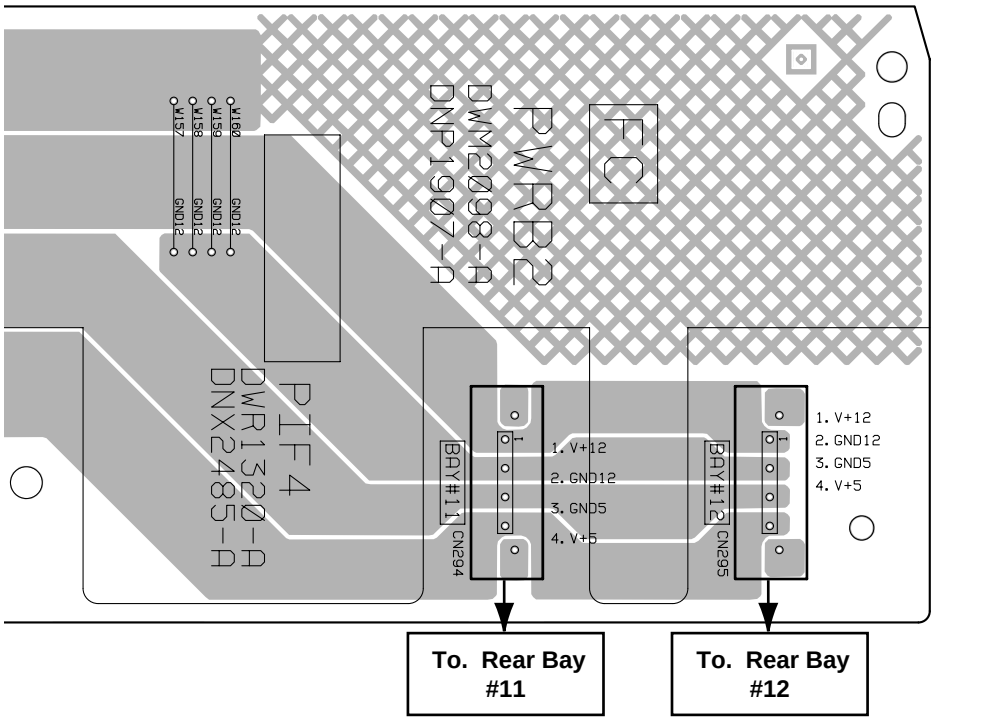
PWRB2
DWM2098-A
DNP1907-A
PTF4
DWR1320-A
DNX2485-A
BAY#11 CN294
BAY#12 CN295
1. V+12
2. GND12
3. GND5
4. V+5
To. Rear Bay #11
To. Rear Bay #12

SIDE A

4.4 MMCB, FCNB, TMNB, DNSE, UPSE, DCMB1, DCMB2, IDSB and DSEB BOARD ASSYS

SIDE A

J MMCB BOARD ASSY

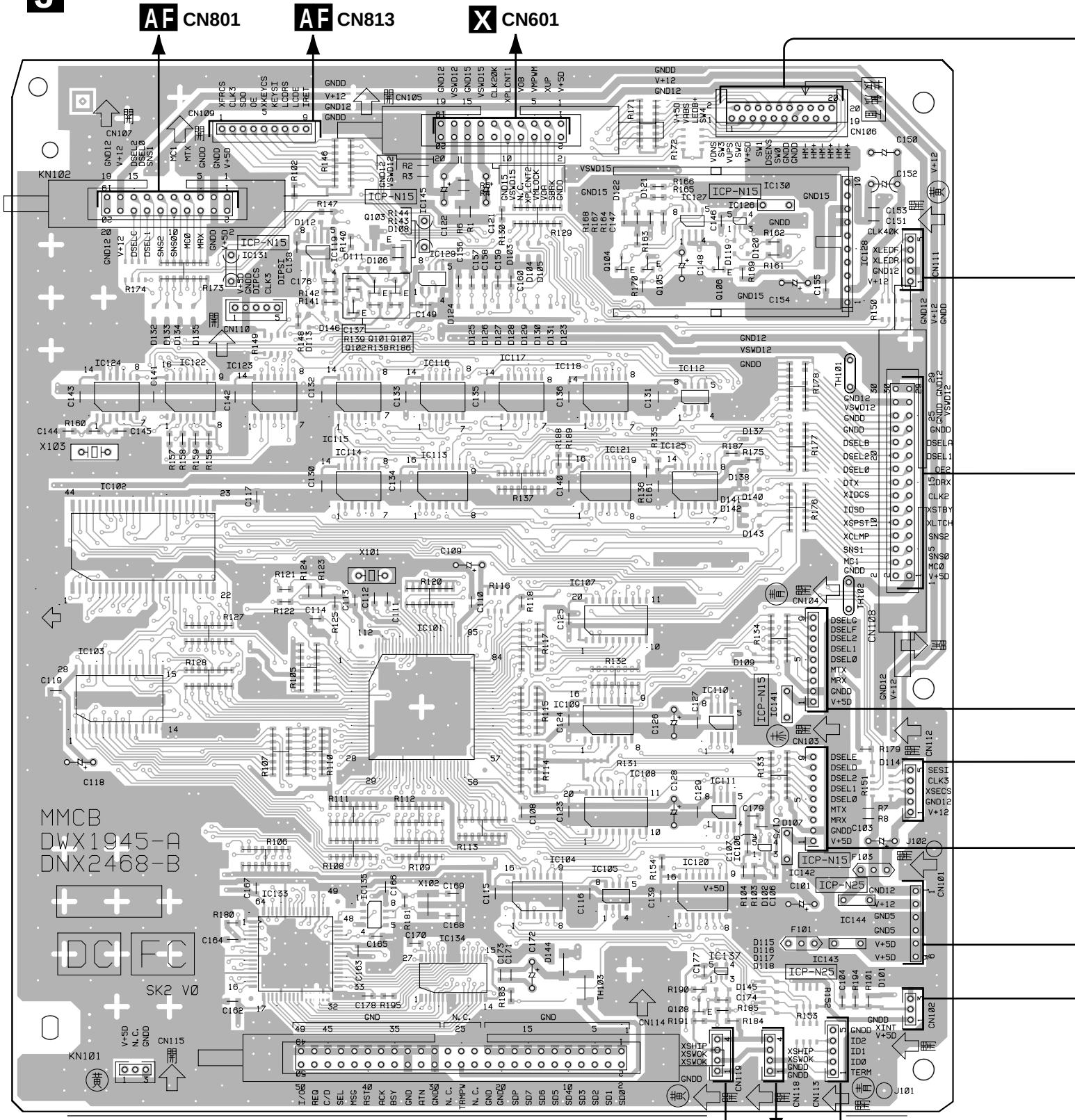

(DNP1903-B)

IC124	IC122	IC131	IC123	IC119	Q102	Q101	IC145	IC117	IC118	IC127	IC144
IC102					IC115	Q107	IC129	IC104	IC121	IC112	IC143
IC103			IC133		IC114		IC116		IC107	IC125	
					IC135		IC113	IC134	IC109	IC110	
							IC101		IC108	IC111	
									IC105	IC120	

SIDE A

AP FCNB BOARD ASSY

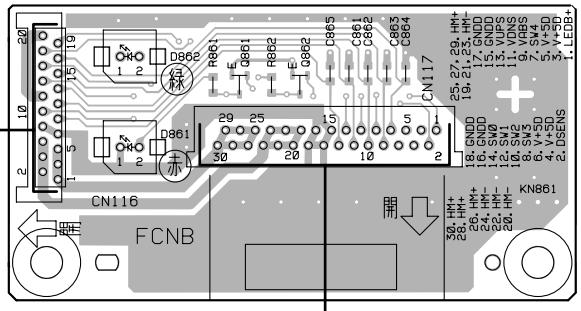

(DNP1903-B)

Z CN851

K TMNB BOARD ASSY

(DNP1910-A)

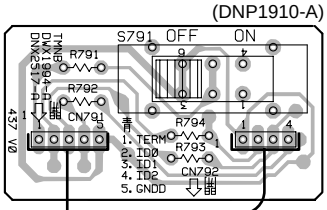

J CN113

L IDSB BOARD ASSY

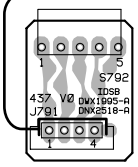

(DNP1910-A)

AL DNSE BOARD ASSY

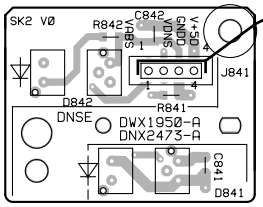

(DNP1905-A)

S CN301

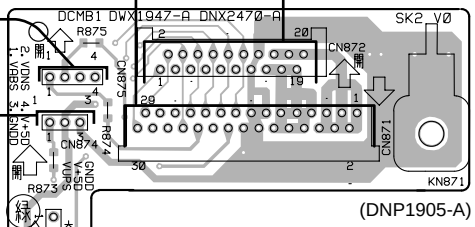

(DNP1905-A)

AJ DCMB1 BOARD ASSY

AK UPSE BOARD ASSY

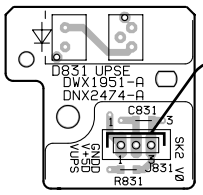

(DNP1905-A)

To. VD Motor

AM DCMB2 BOARD ASSY

Q CN626

AE CN856

M CN421

F CN261

B CN211

ADJ_TP

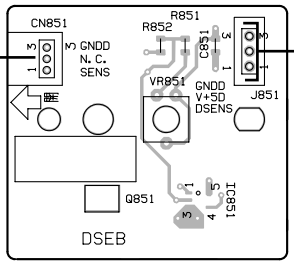

(DNP1905-A)

AN DSEB BOARD ASSY

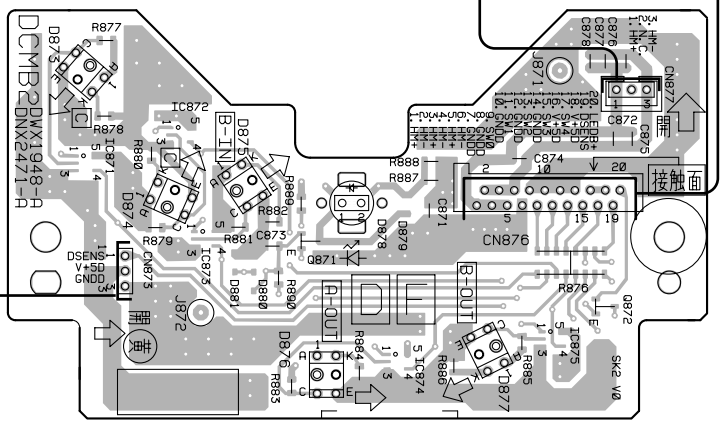

(DNP1905-A)

Q872

4.5 MMCB, FCNB, DNSE, UPSE, DCMB1, DCMB2 and DSEB BOARD ASSYS

SIDE B

J MMCB BOARD ASSY

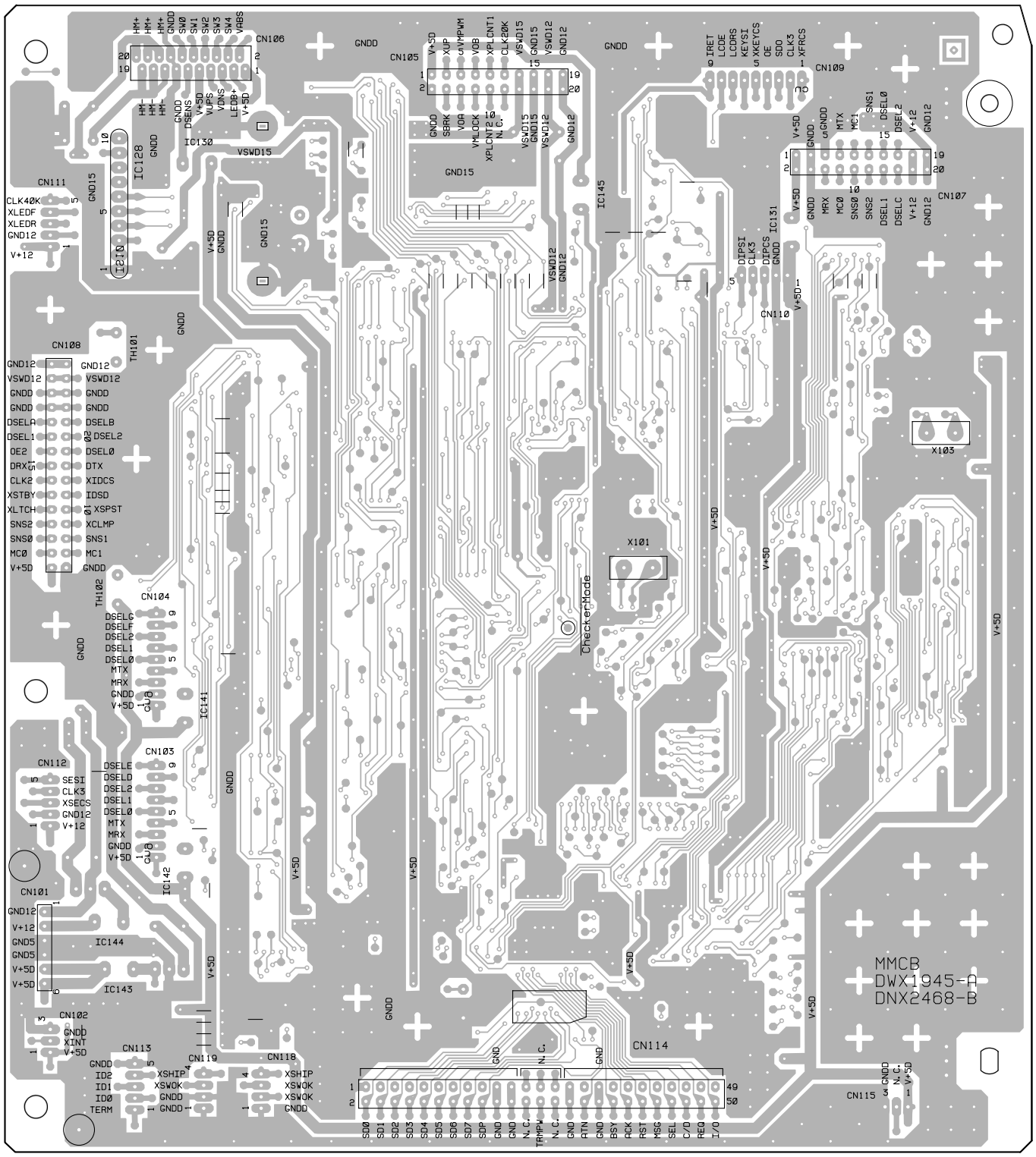

(DNP1903-B)

SIDE B

AP FCNB BOARD ASSY

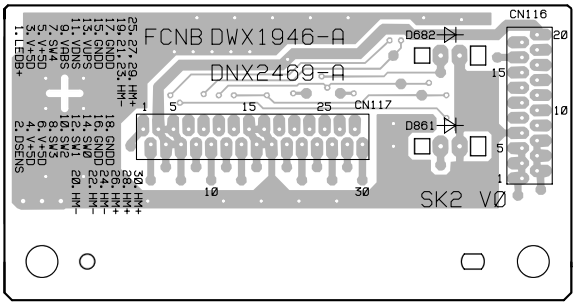

(DNP1903-B)

AL DNSE BOARD ASSY

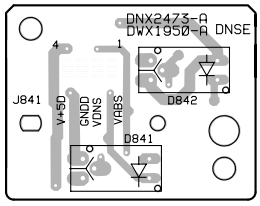

(DNP1905-A)

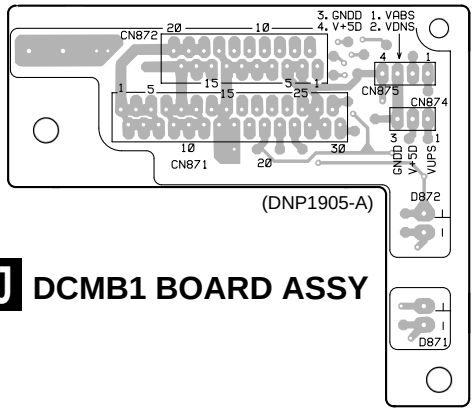

(DNP1905-A)

AK UPSE BOARD ASSY

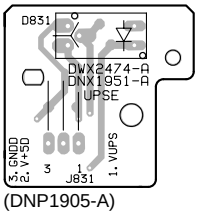

(DNP1905-A)

AJ DCMB1 BOARD ASSY

AM DCMB2 BOARD ASSY

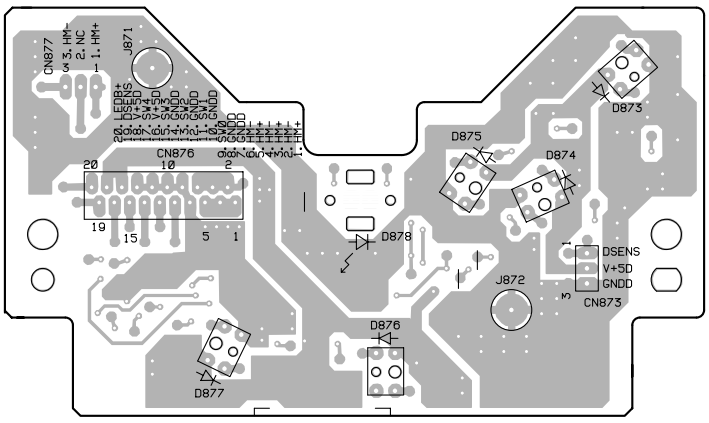

(DNP1905-A)

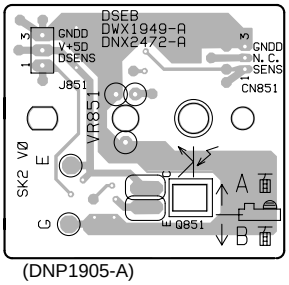

(DNP1905-A)

AN DSEB BOARD ASSY

4.6 MIF1F, MIF2F and TMRB 1 - TMRB 7 BOARD ASSYS

ND TMRB 4 BOARD ASSY **NC TMRB 3 BOARD ASSY** **NB TMRB 2 BOARD ASSY** **NA TMRB 1 BOARD ASSY**

SIDE A

J CN103

M MIF1F BOARD ASSY (DNP1909-A) (DNP1909-A) (DNP1909-A) (DNP1909-A)

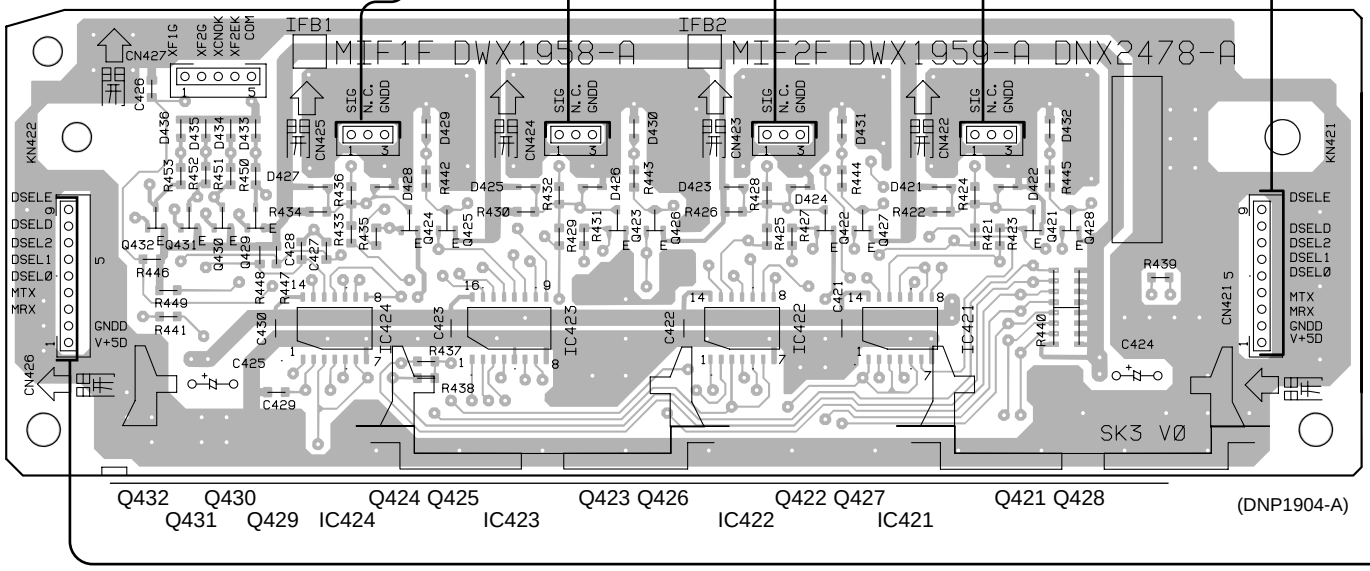

(DNP1904-A)

SIDE B

M MIF1F BOARD ASSY

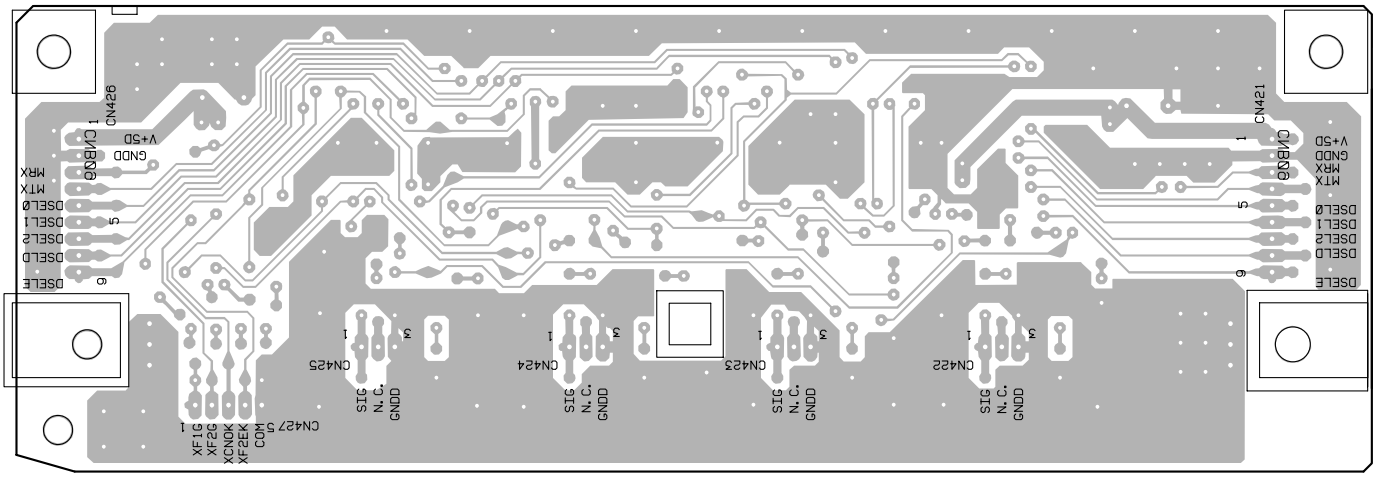

(DNP1904-A)

NG TMRB 7 BOARD ASSY **NF TMRB 6 BOARD ASSY** **NE TMRB 5 BOARD ASSY**

SIDE A

O MIF2F BOARD ASSY

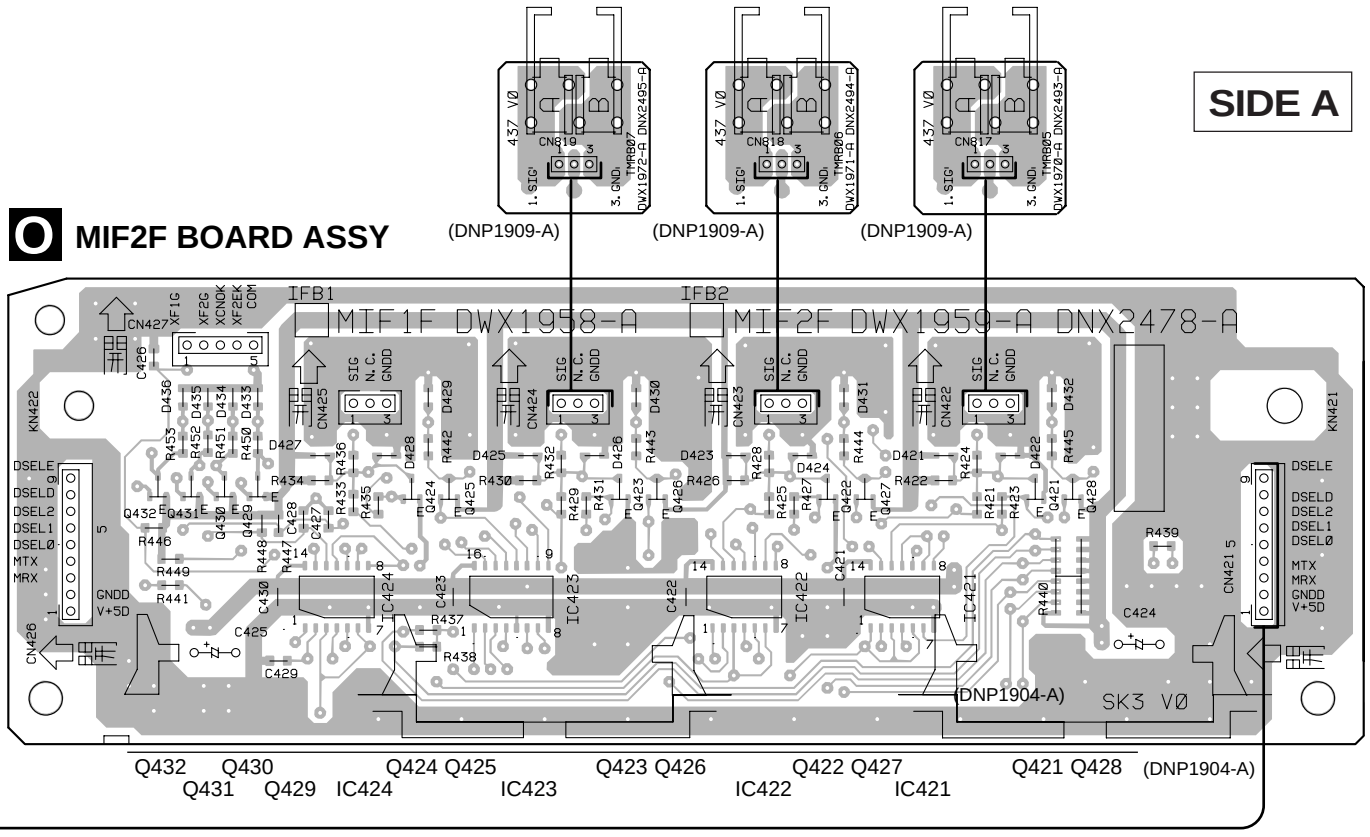

SIDE B

O MIF2F BOARD ASSY

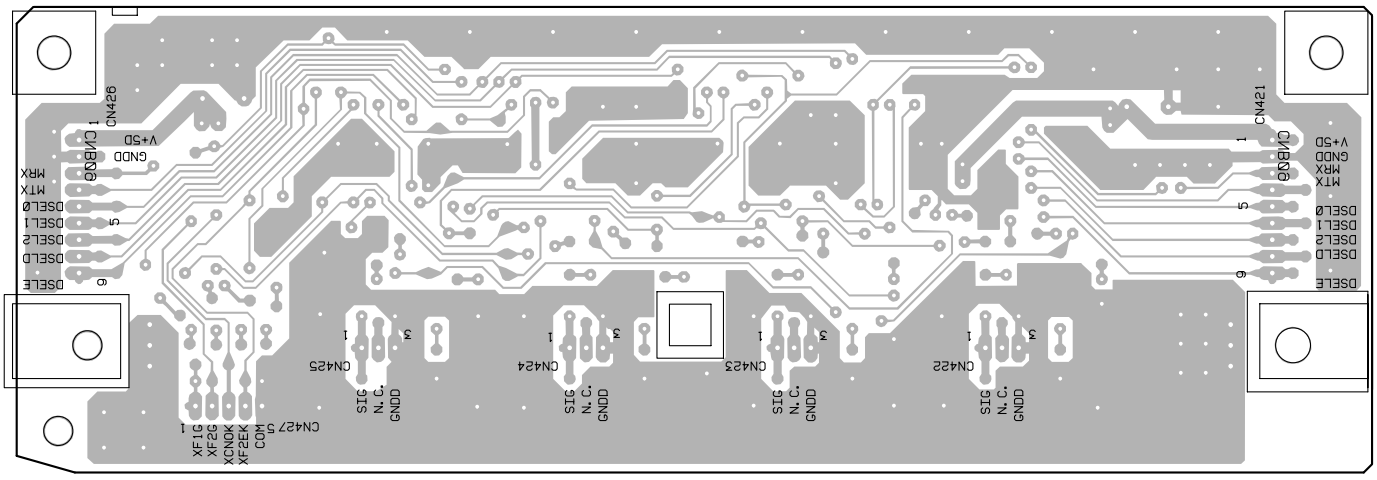

4.7 MIF1R, MIF2R and TMRB 8 - TMRB 15 BOARD ASSYS

SIDE A

NK TMRB 11 BOARD ASSY **NJ TMRB 10 BOARD ASSY** **NI TMRB 9 BOARD ASSY** **NH TMRB 8 BOARD ASSY**

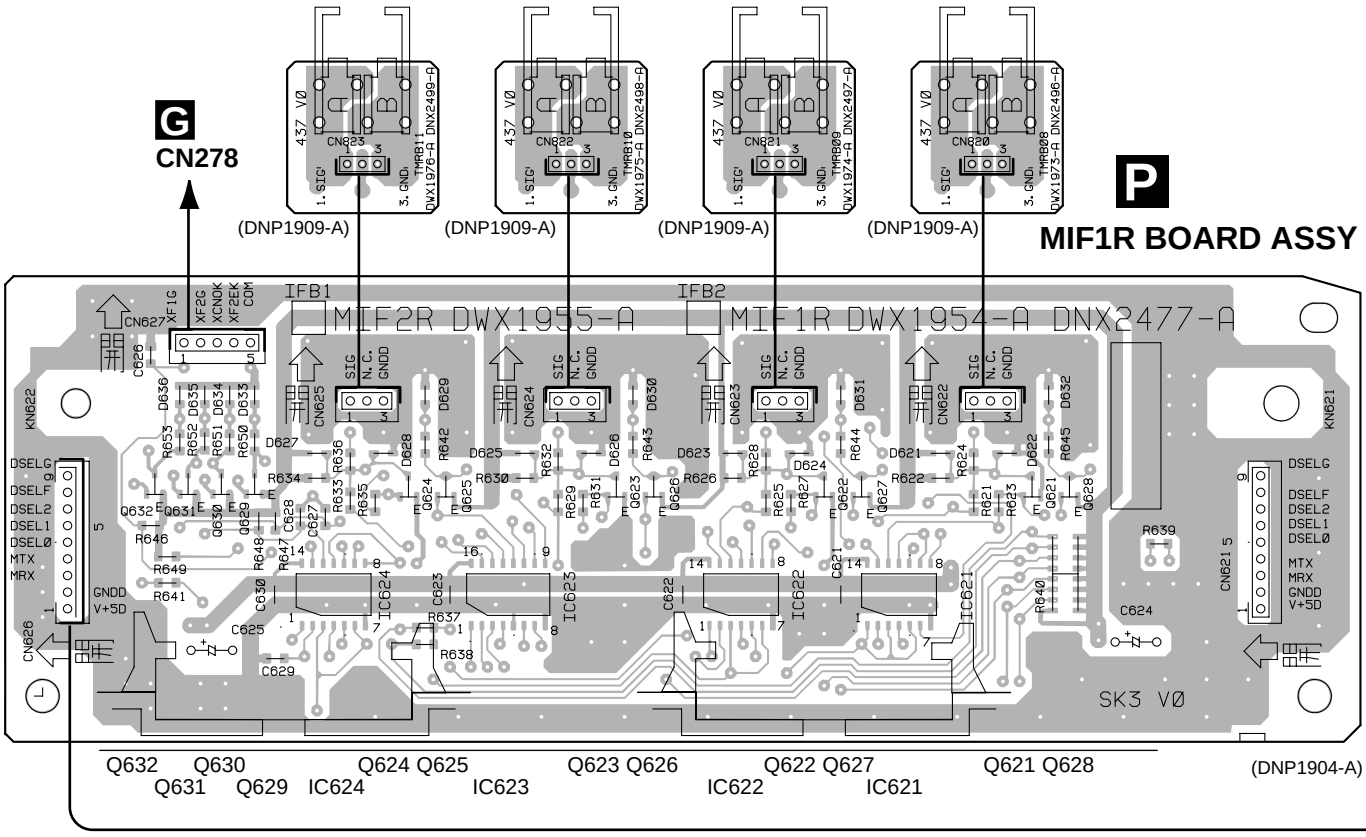

SIDE B

P

MIF1R BOARD ASSY

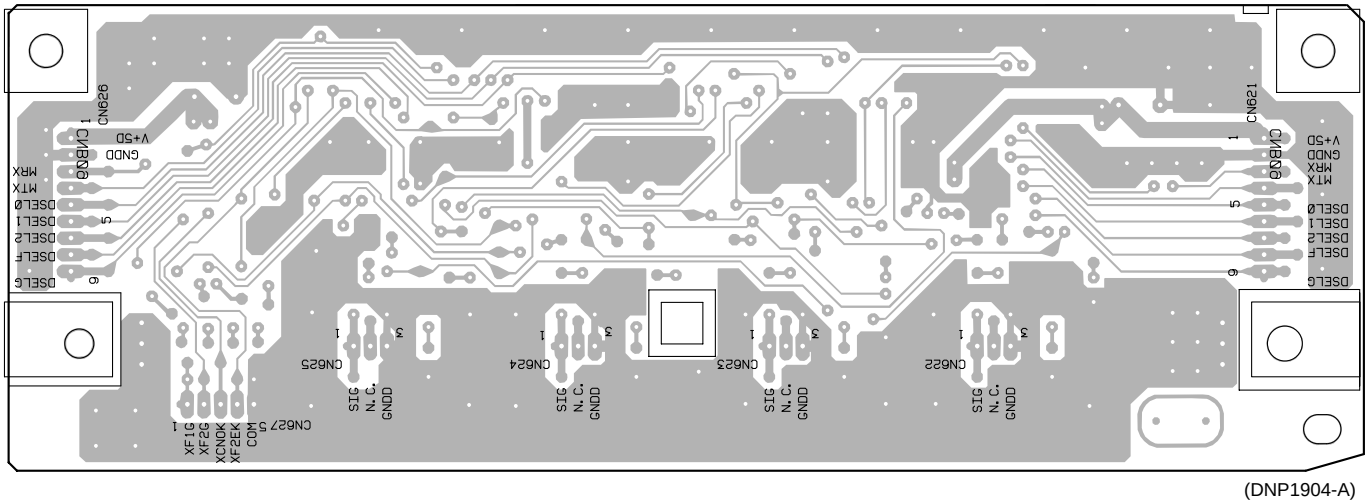

NO TMRB 15 BOARD ASSY **NN TMRB 14 BOARD ASSY** **NM TMRB 13 BOARD ASSY** **NL TMRB 12 BOARD ASSY**

SIDE A

J
CN104

Q
MIF2R BOARD ASSY

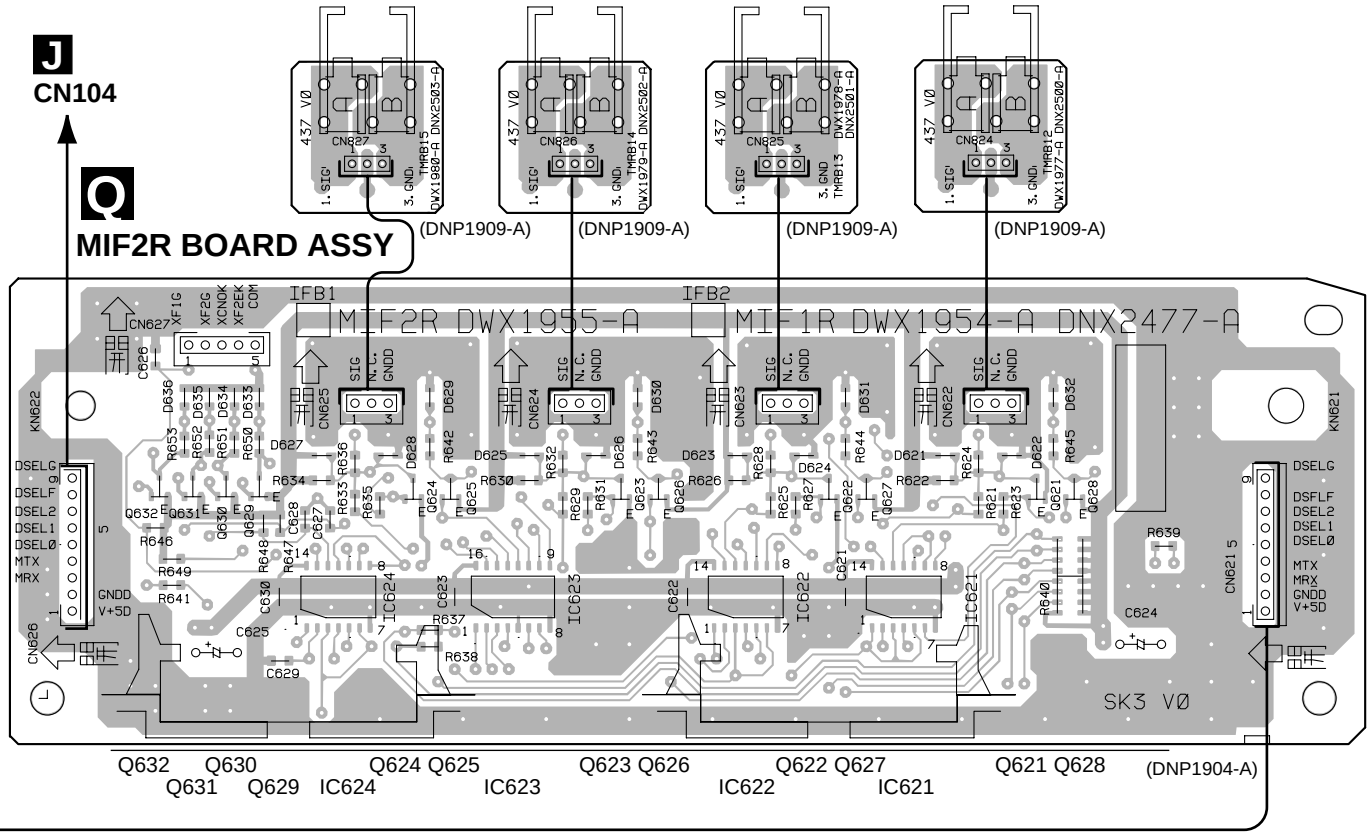

SIDE B

Q
MIF2R BOARD ASSY

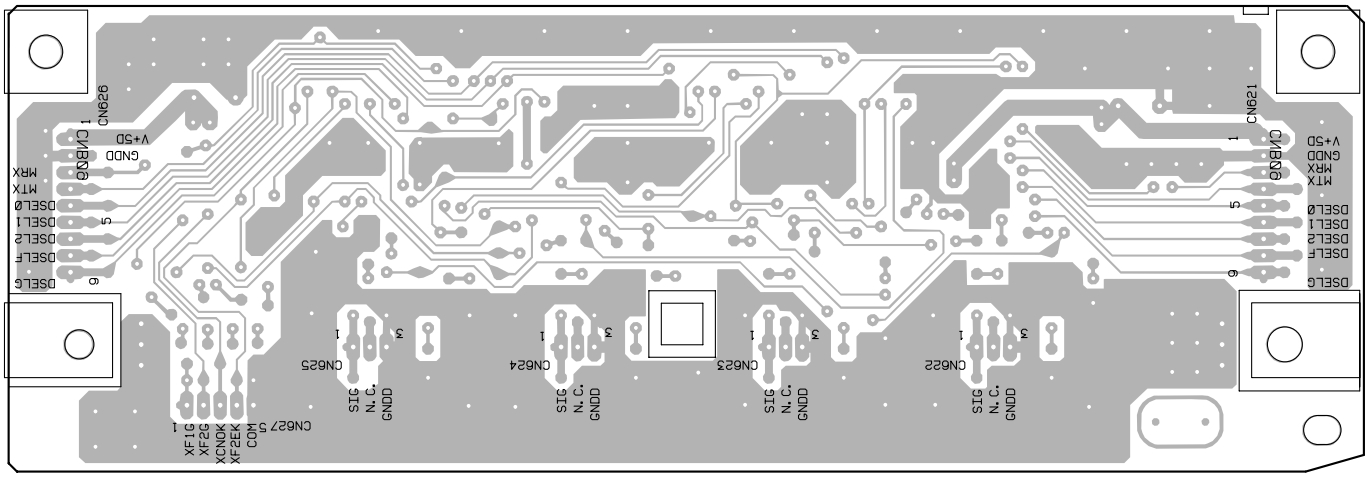

QNL-NO 99

4.8 DIFB1 BOARD ASSY

S **DIFB1 BOARD ASSY**

T **CN501**

To. Rear Bay #04

To. Rear Bay #03

SIDE A

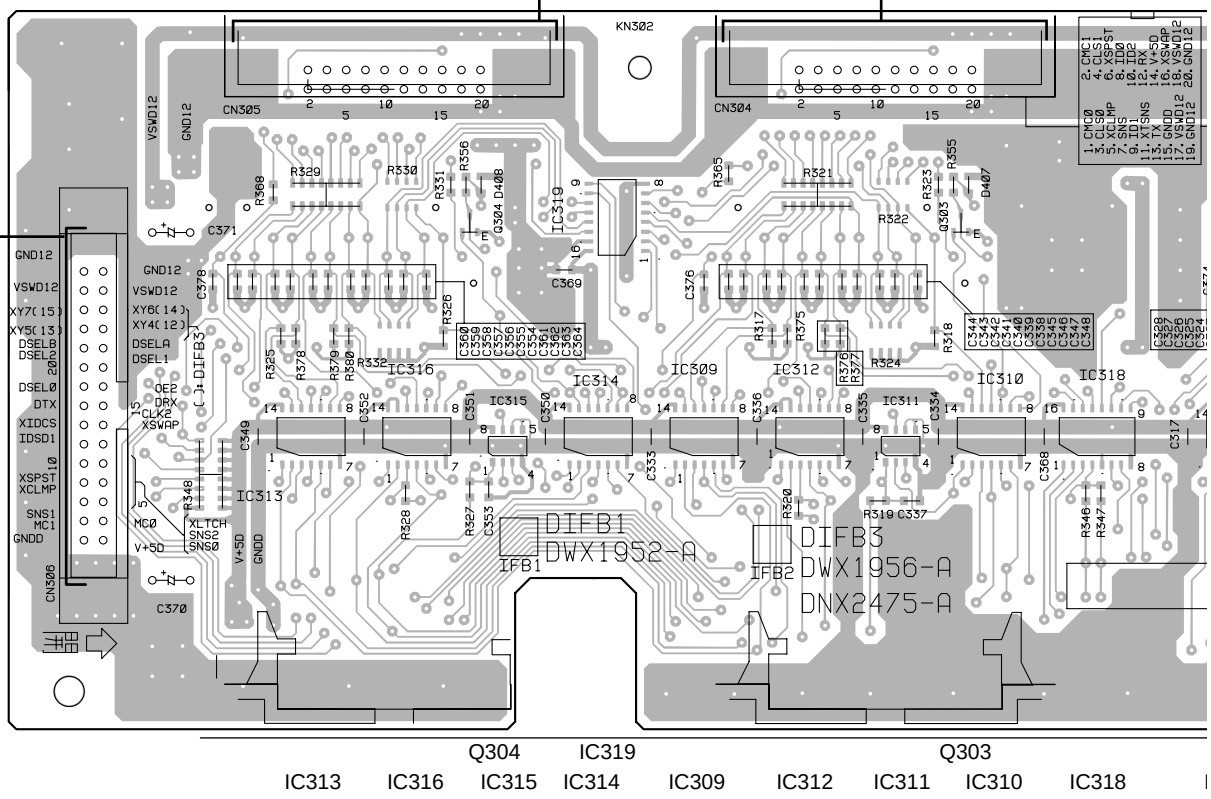

S **DIFB1 BOARD ASSY**

SIDE B

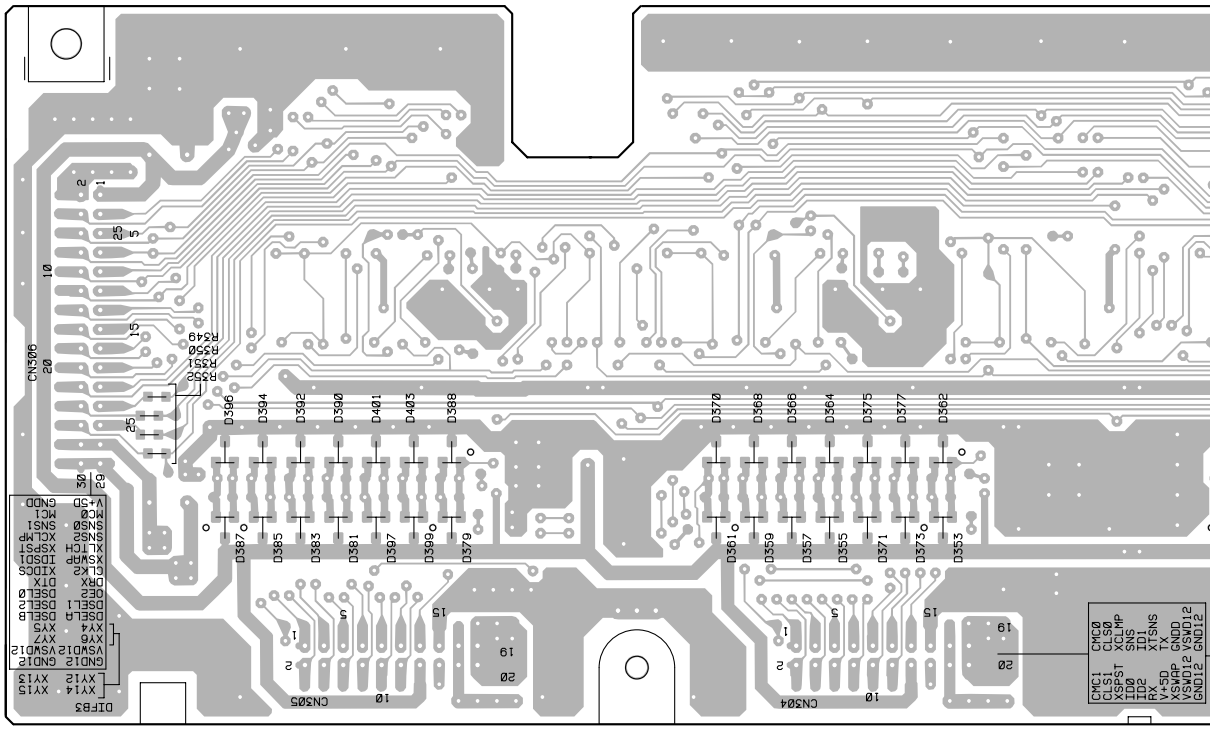

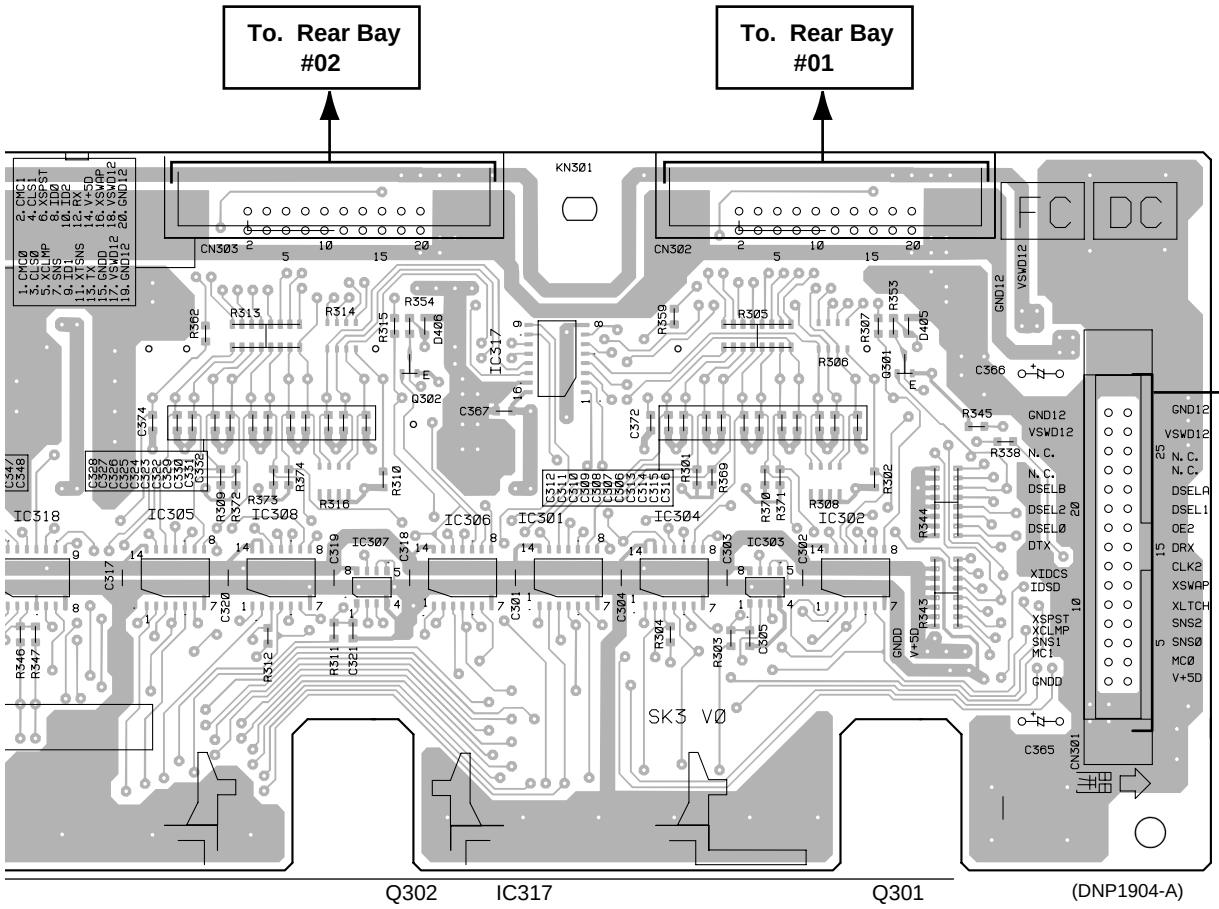

(DNP1904-A)

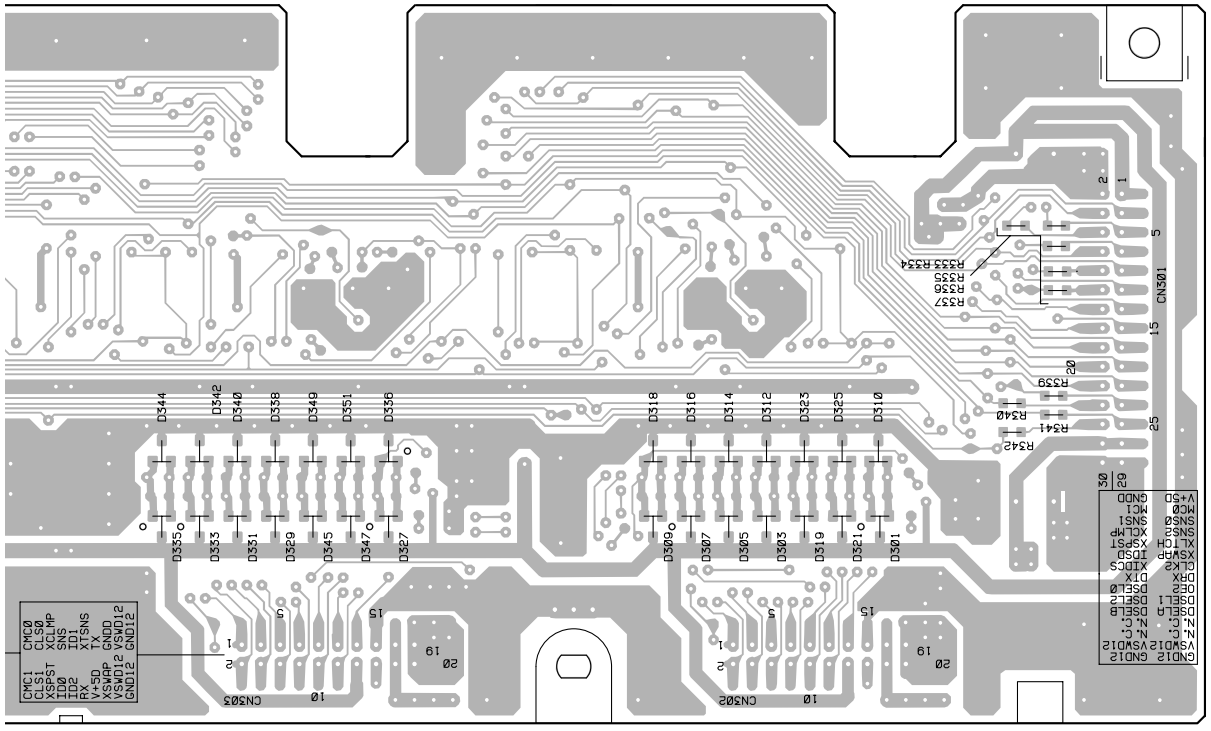

(DNP1904-A)

4.9 DIFB2 BOARD ASSY

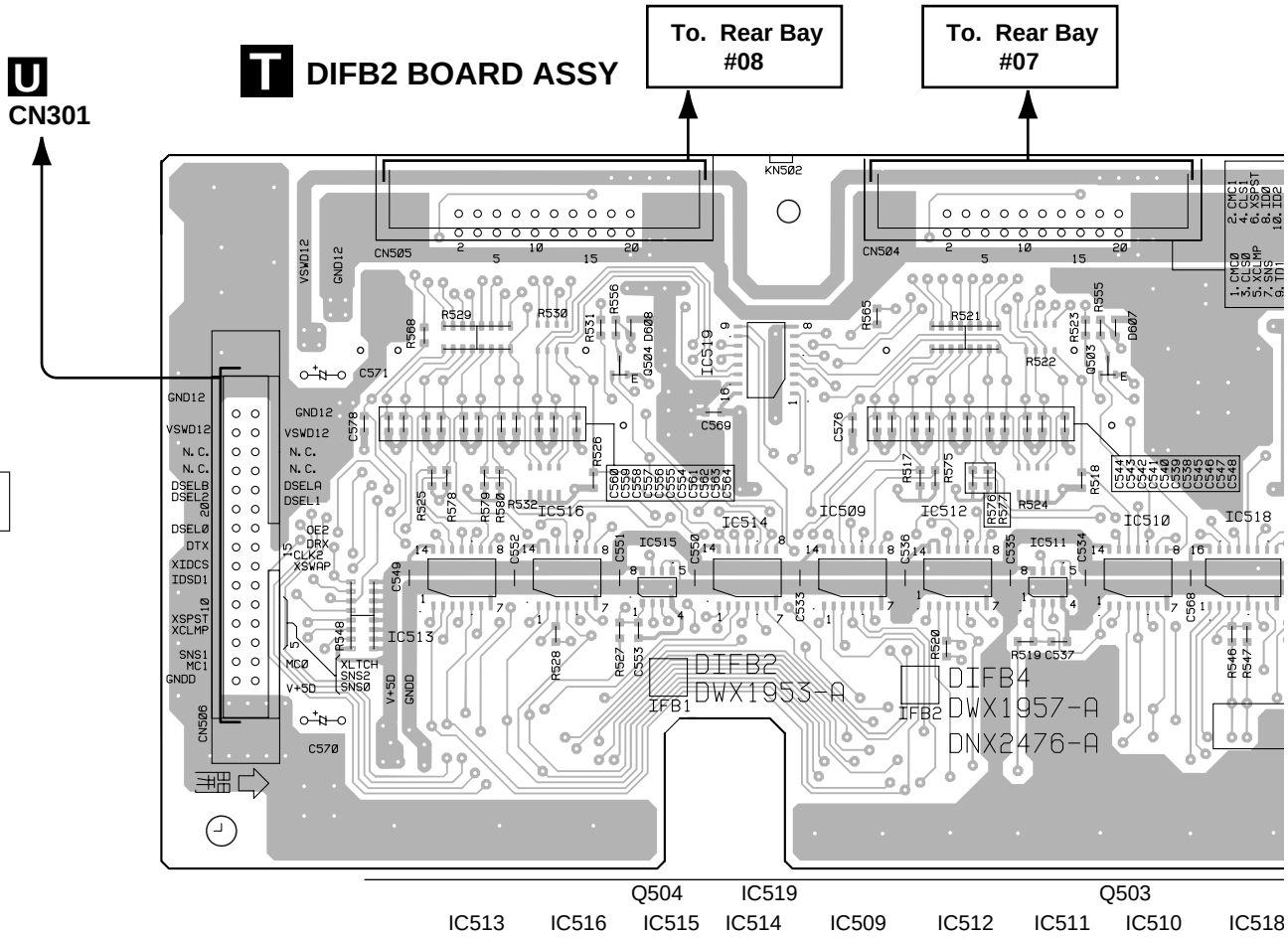

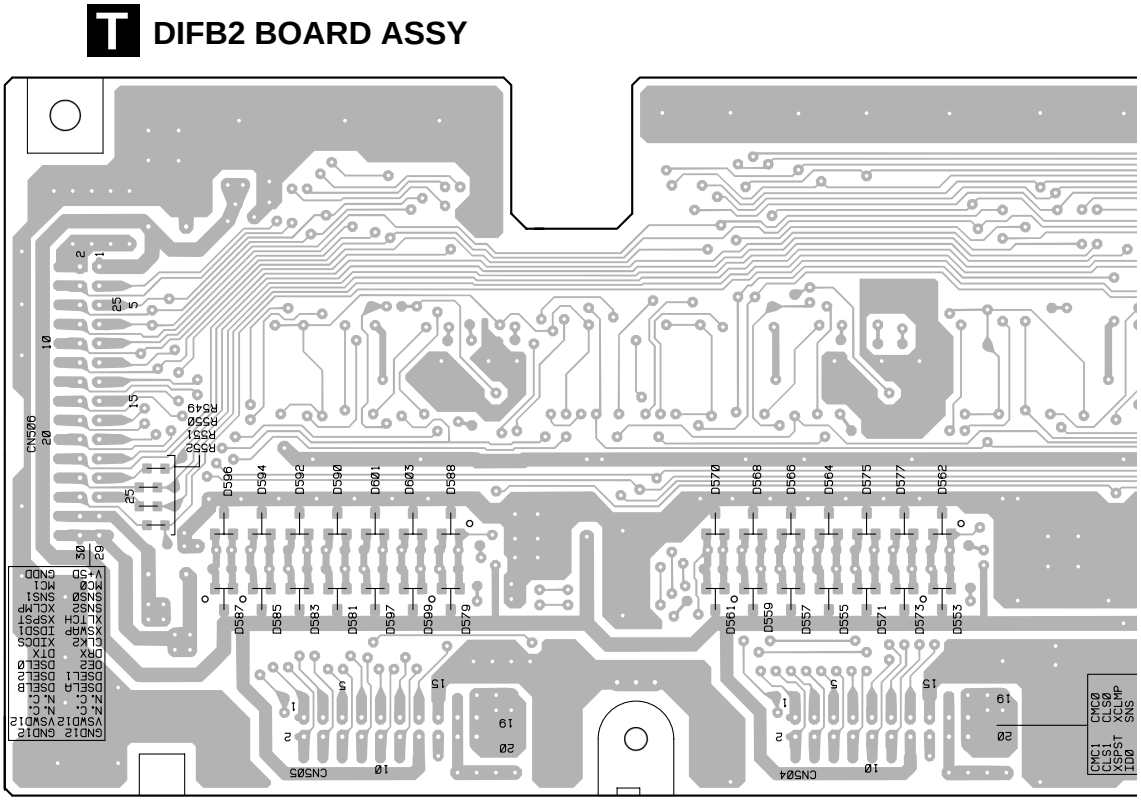

DRM-7000, DRM-AF751, DRM-AL751, DRM-AH721, DRM-PW701

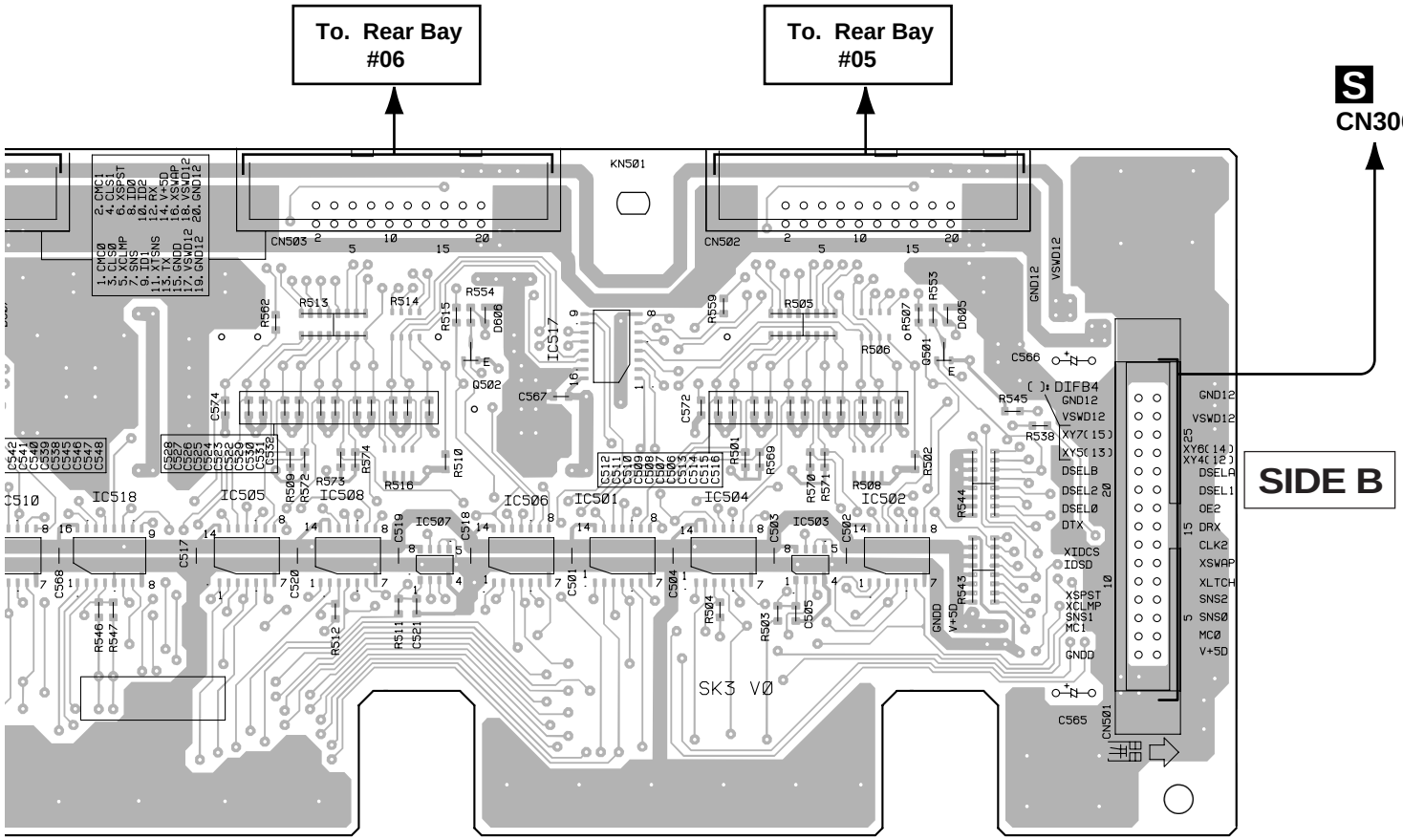

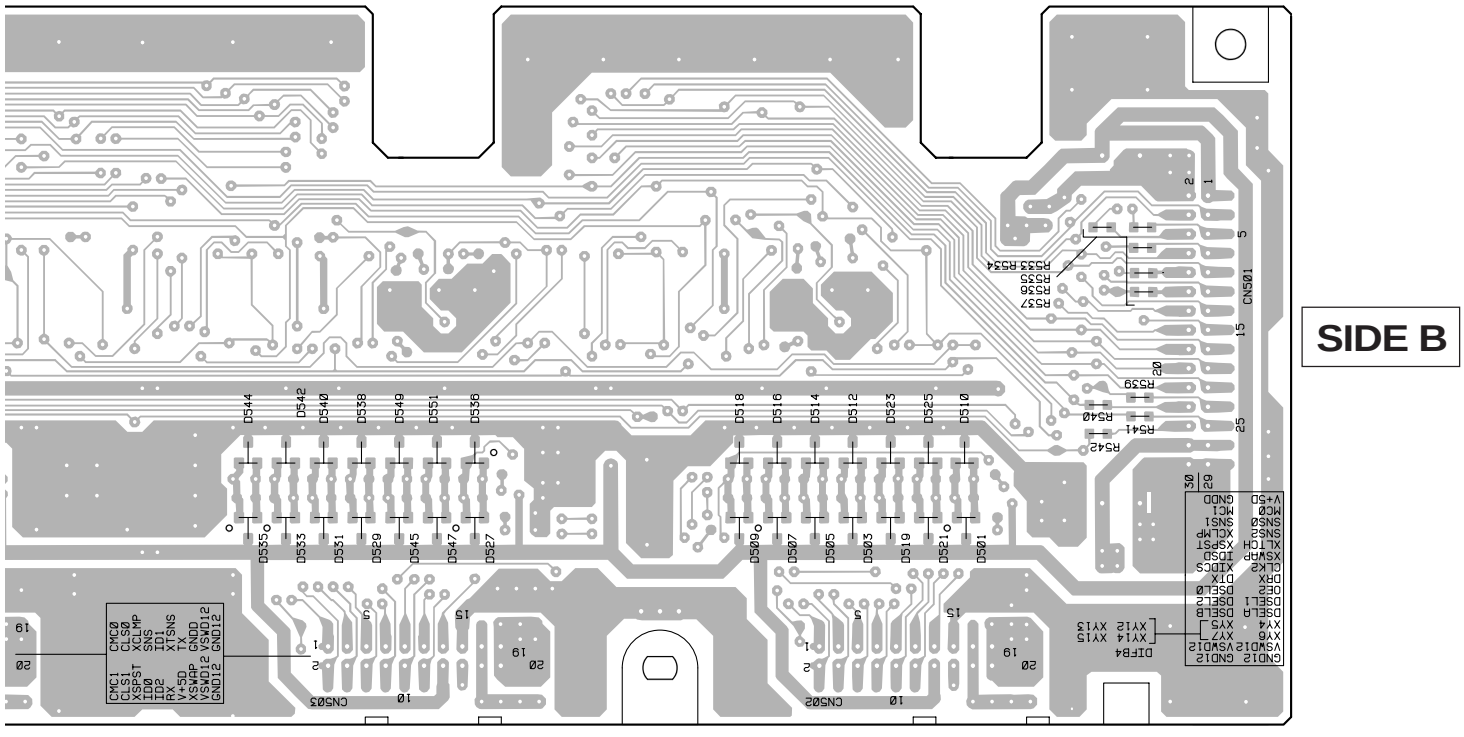

4.10 DIFB3 BOARD ASSY

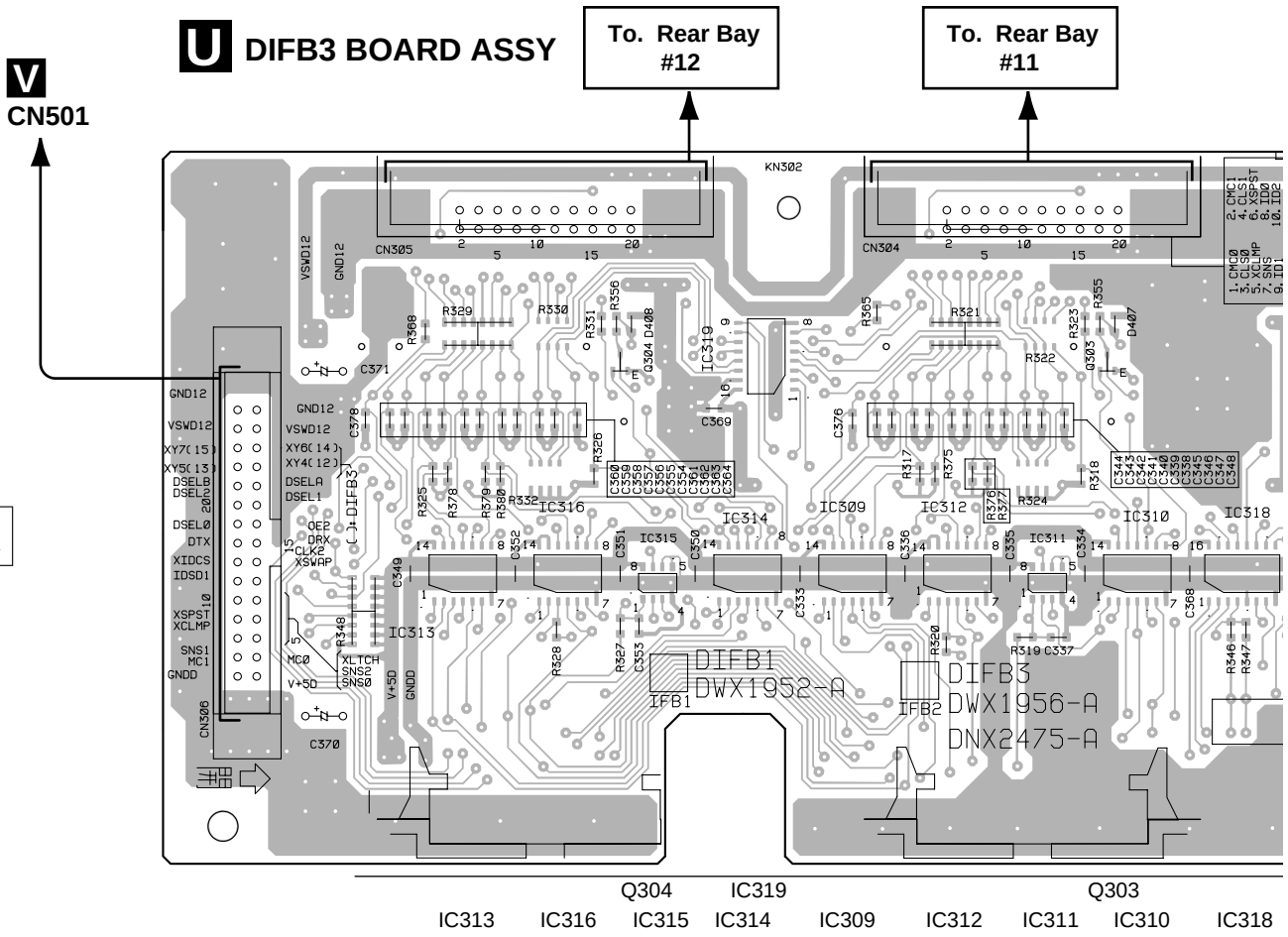

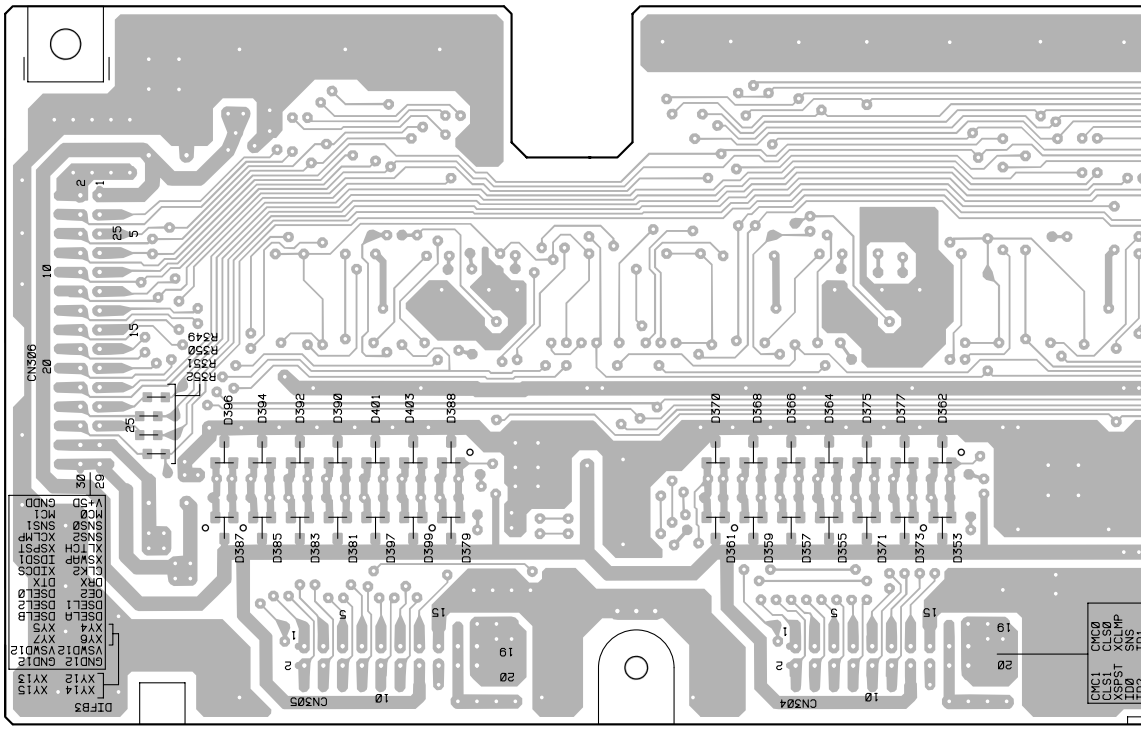

DRM-7000, DRM-AF751, DRM-AL751, DRM-AH721, DRM-PW701

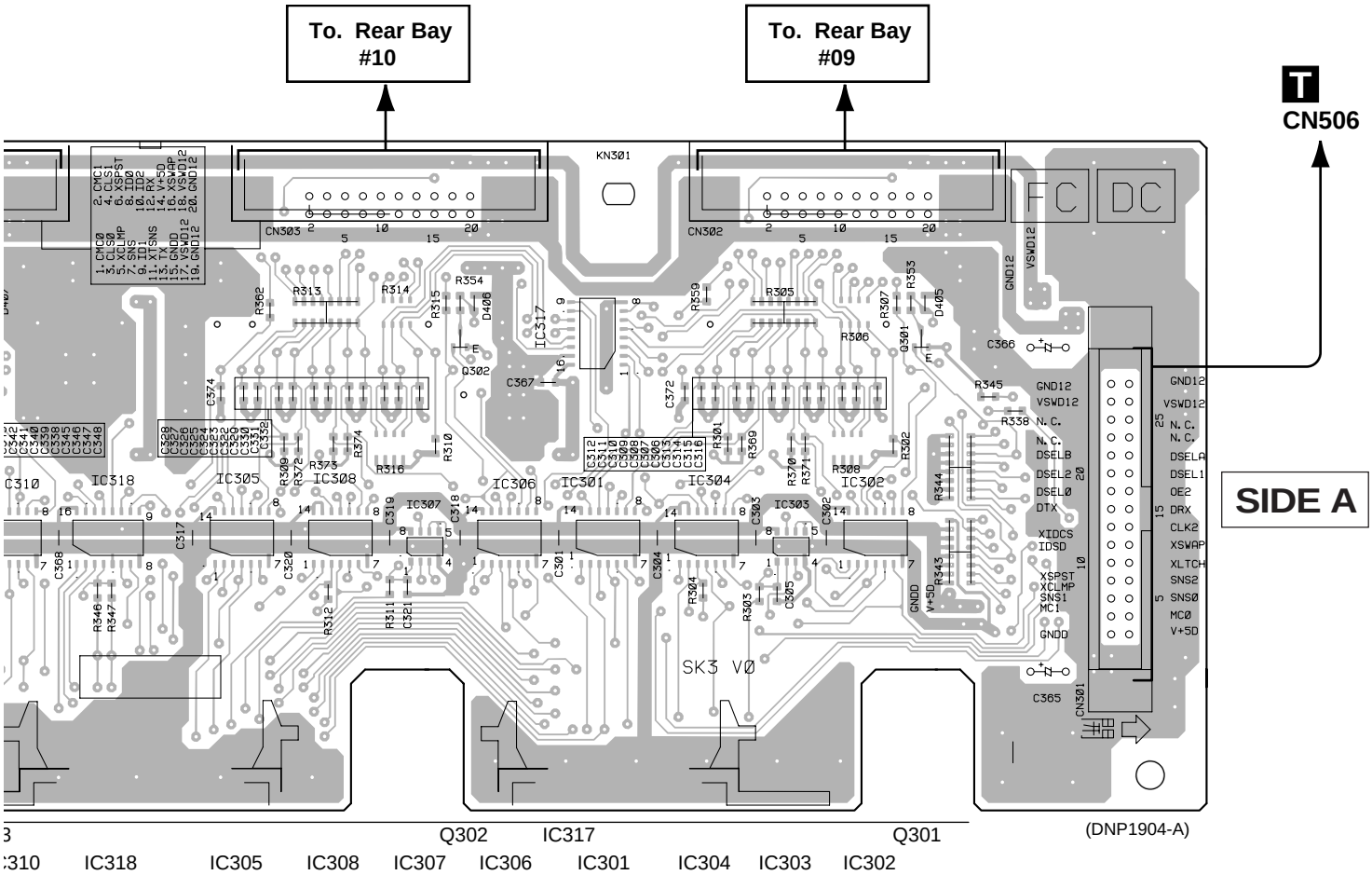

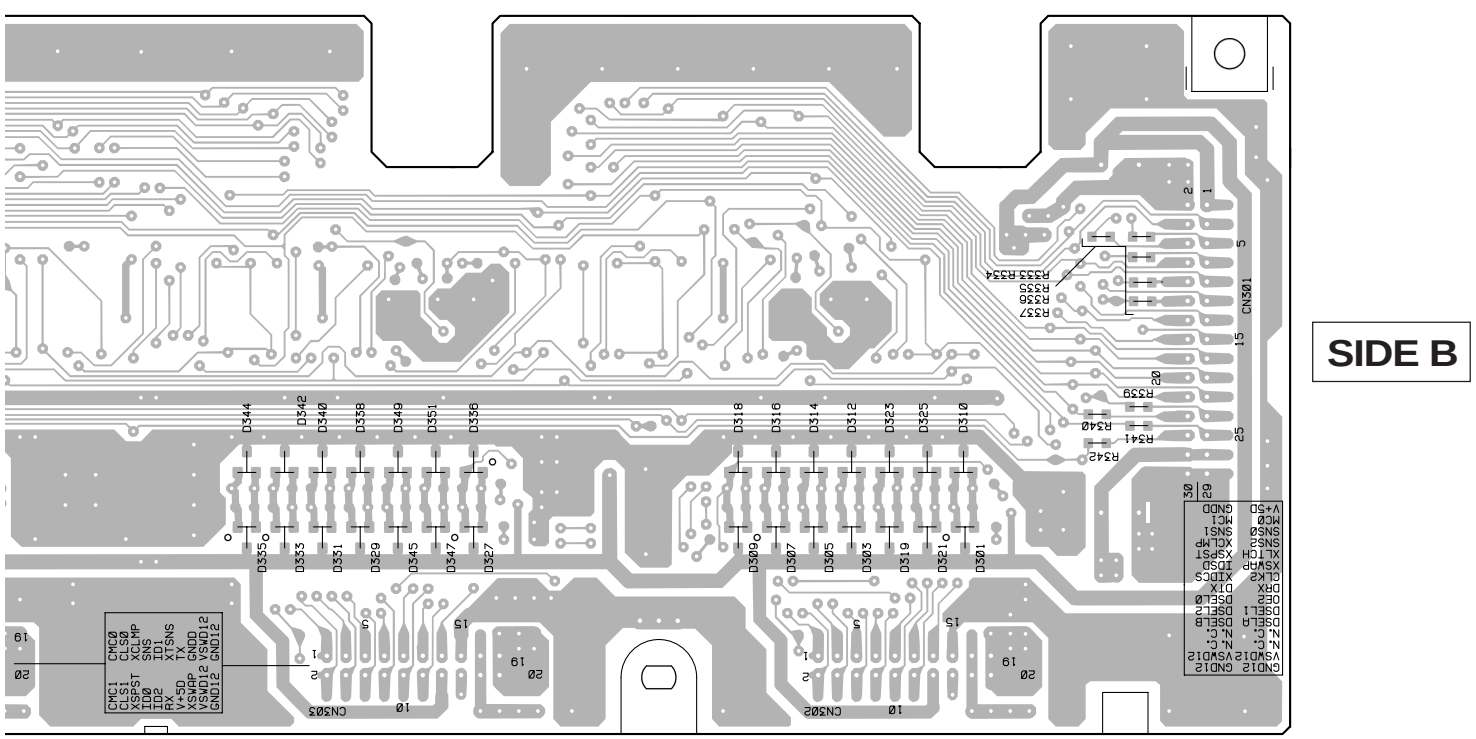

4.11 DIFB4 BOARD ASSY

SIDE A

DIFB4 BOARD ASSY

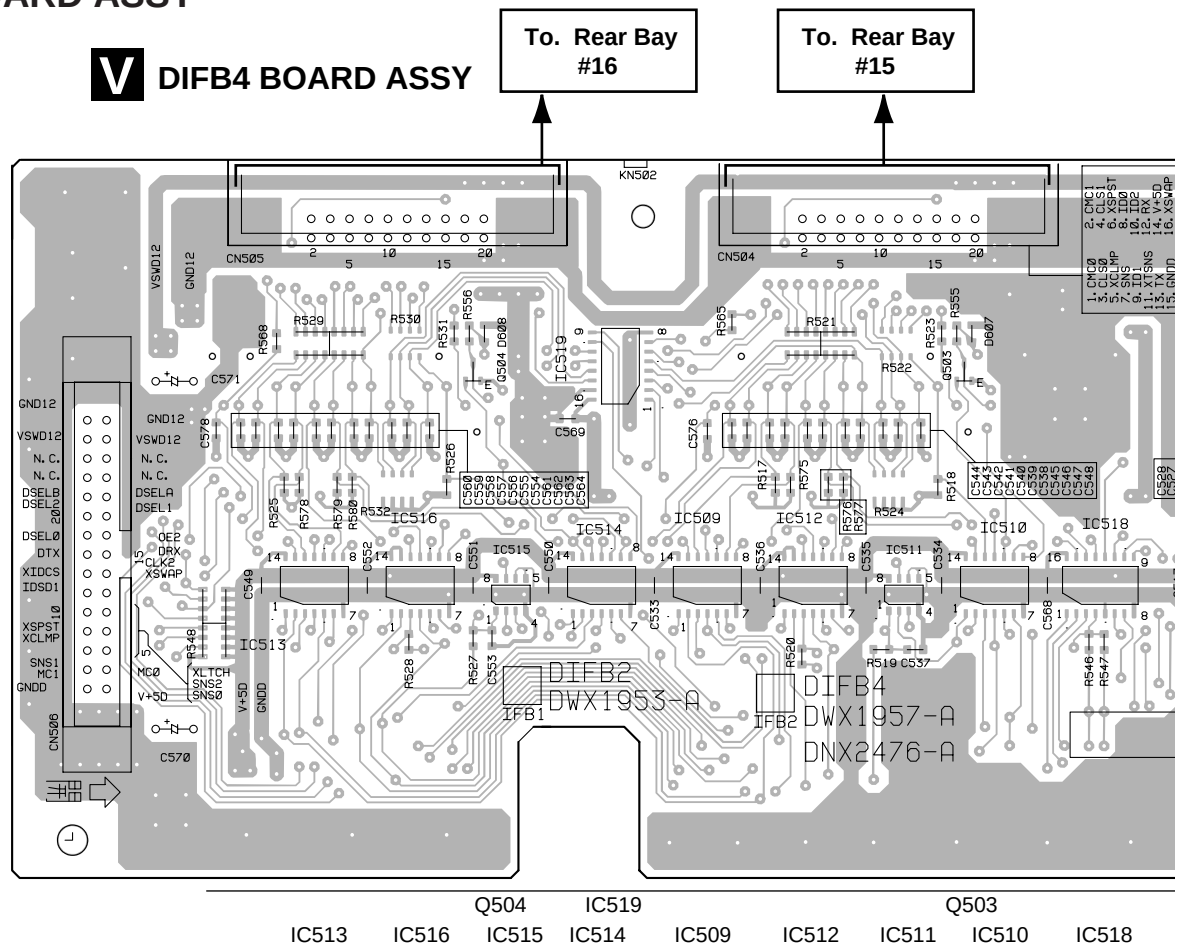

SIDE B

DIFB4 BOARD ASSY

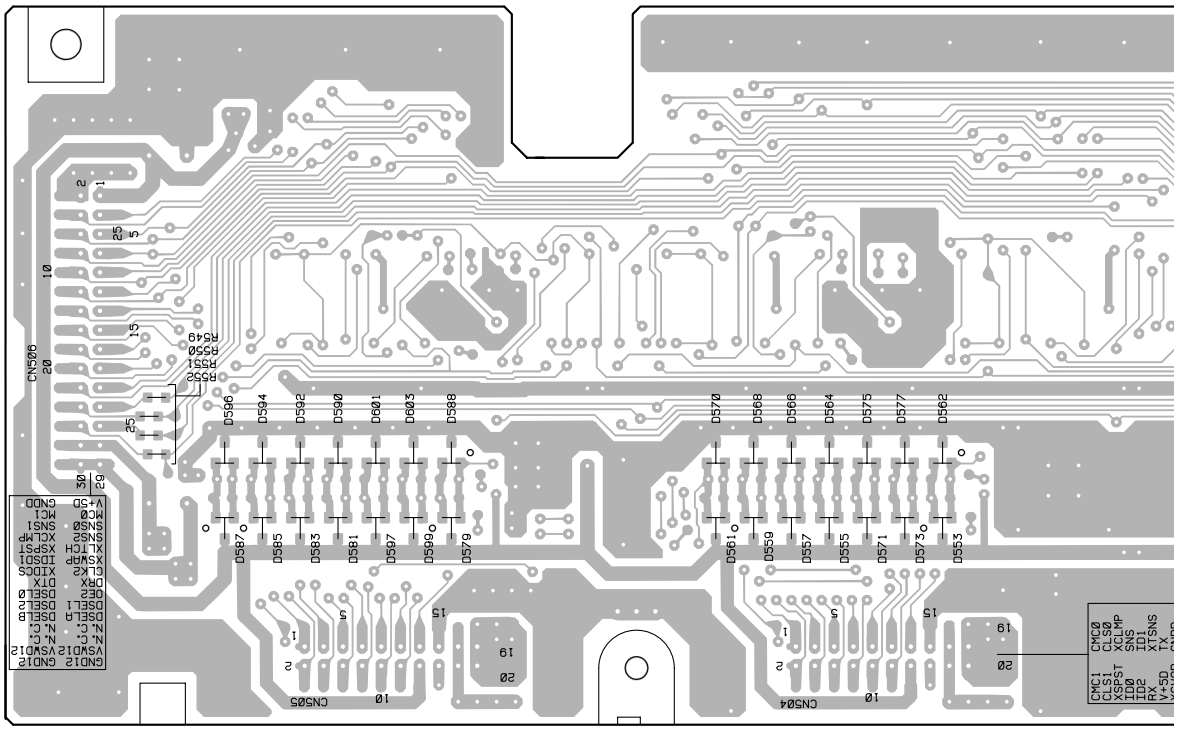

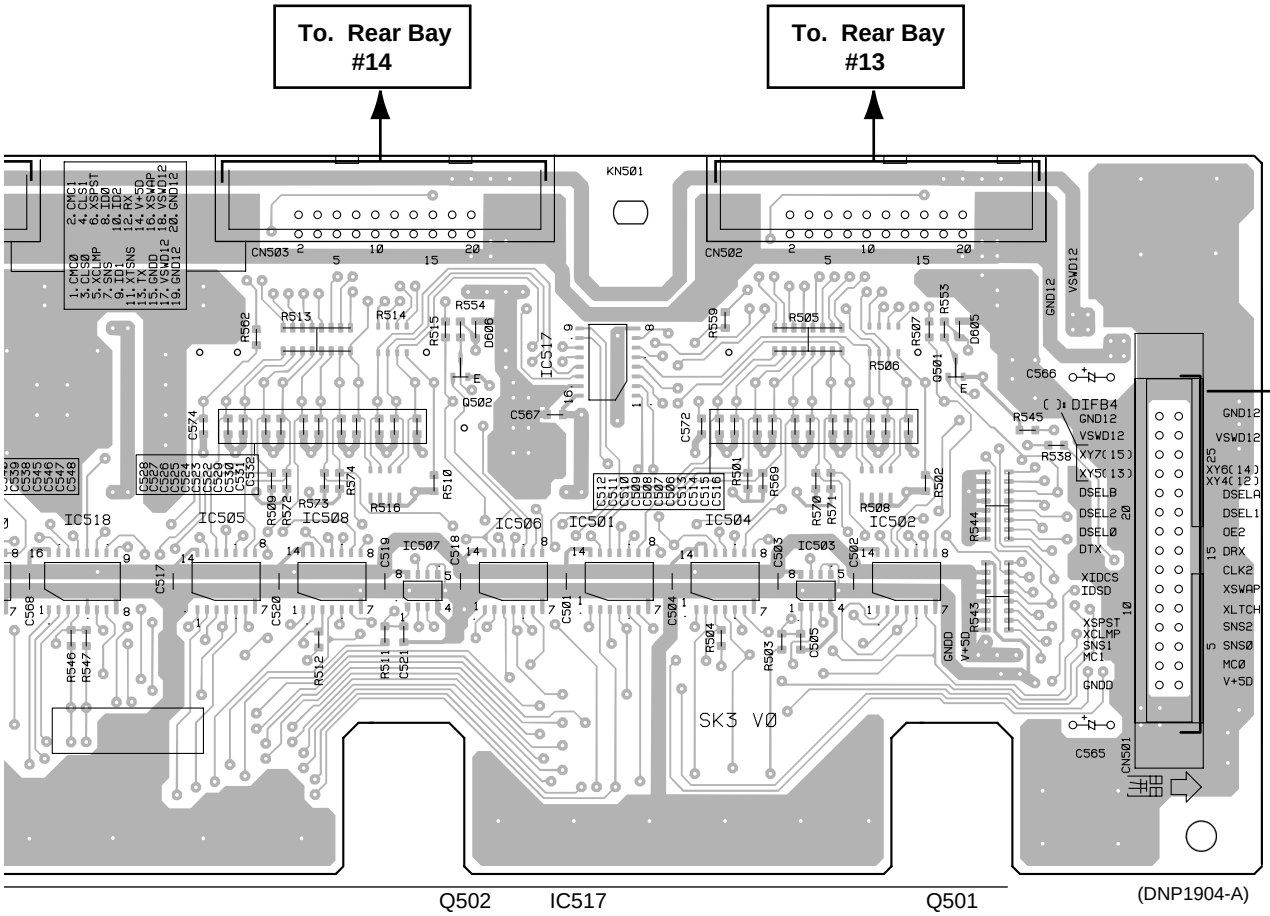
To. Rear Bay #14
To. Rear Bay #13
U
CN306
SIDE A
Q502
IC517
Q501
IC518
IC505
IC508
IC507
IC506
IC501
IC504
IC503
IC502
(DNP1904-A)

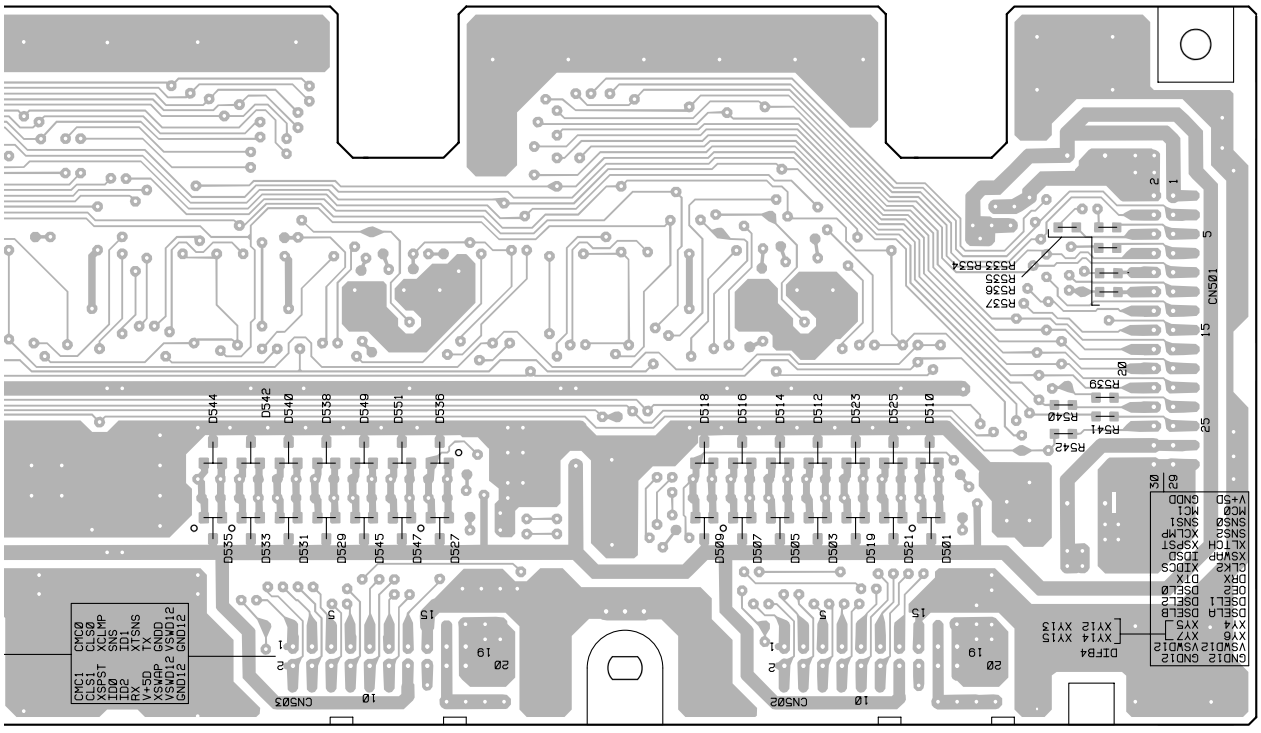
SIDE B
(DNP1904-A)

4.12 VMDB, ENCB, CNNB, SIFB2, MD OR1 and MD OR2 BOARD ASSYS

X VMDB BOARD ASSY

SIDE A

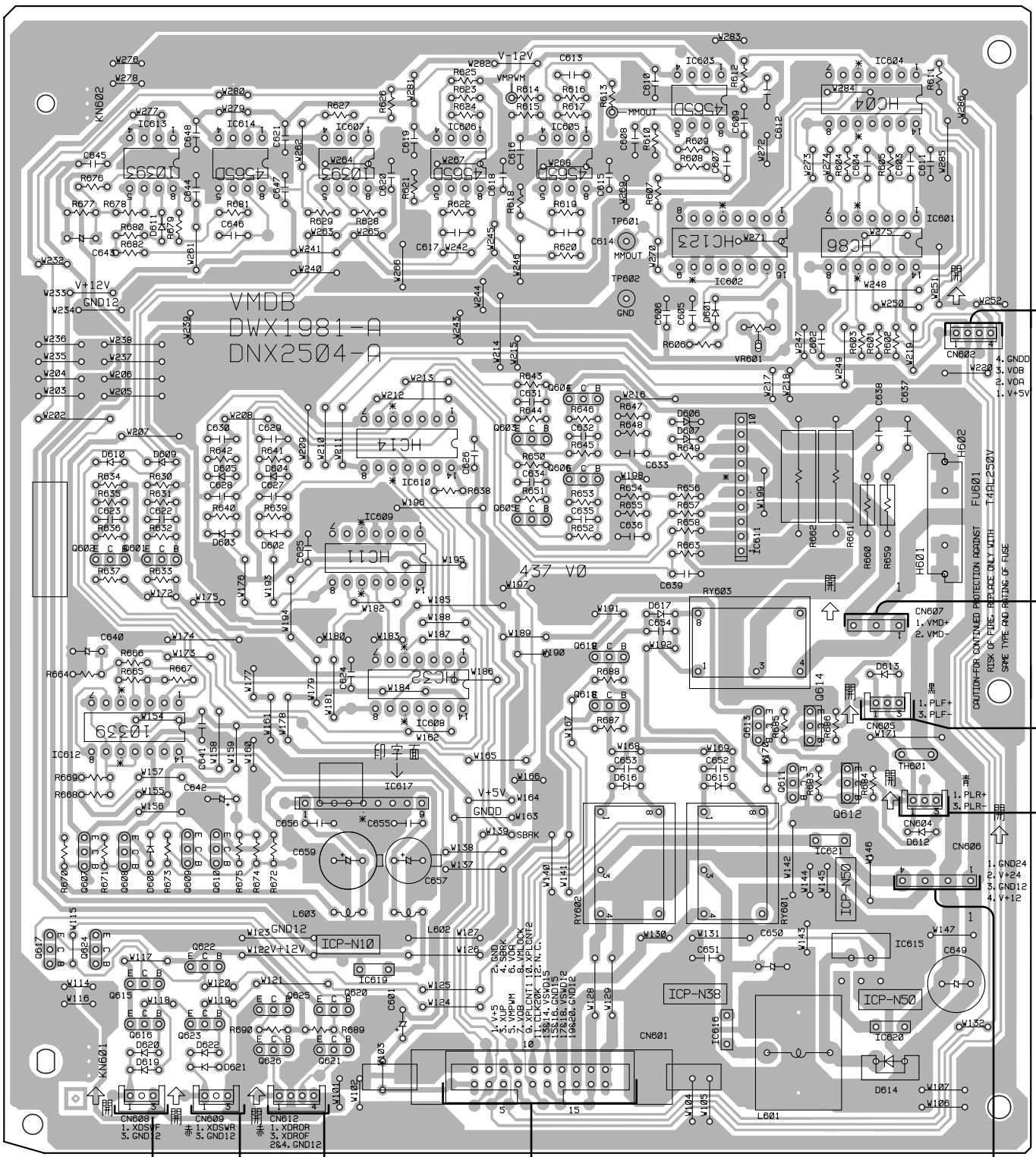

(DNP1909-A)

IC613 IC614
Q602 Q601
IC612
Q607 Q608 Q608 Q610
Q617 Q624 Q615 Q622 Q625
Q616 Q623 Q626

IC607 IC606
IC610
IC609
IC617 IC608
Q620 IC619
Q621

IC605
Q603 Q604 Q619
Q605 Q606 Q618

IC603 IC604
IC602 IC611 IC601
Q613 Q614
Q611 Q612
IC616 IC621 IC620

(DNP1903-A)

To. Door Switch F

To. Door Switch R

J CN105

F CN262

W ENCB BOARD ASSY

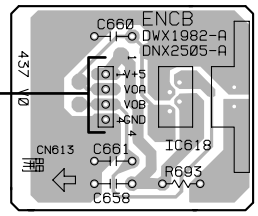

(DNP1909-A)

AA MDOT1 BOARD ASSY

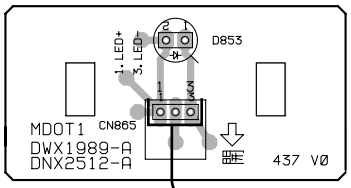

(DNP1909-A)

AB MDOT2 BOARD ASSY

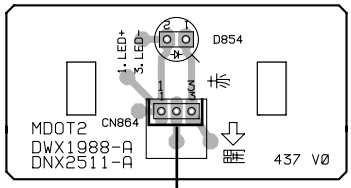

(DNP1909-A)

Y CNNB BOARD ASSY

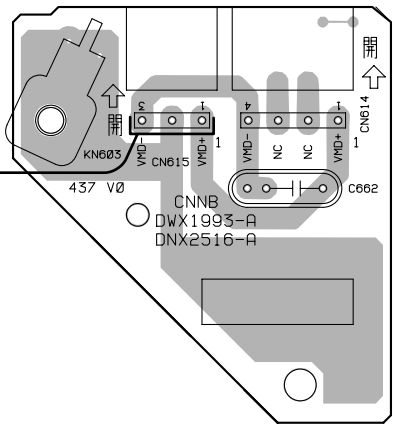

(DNP1909-A)

Z SIFB1 BOARD ASSY

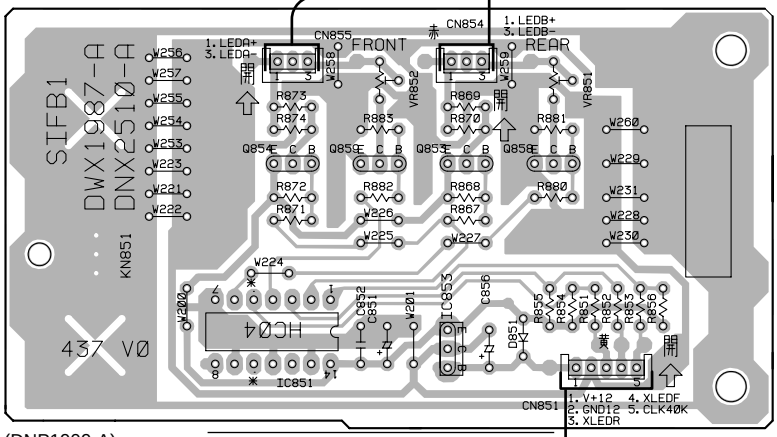

(DNP1909-A)

Q854 Q859 Q853 Q858

J CN112

J CN111

AE SIFB2 BOARD ASSY

To. Front Plunger

To. Rear Plunger

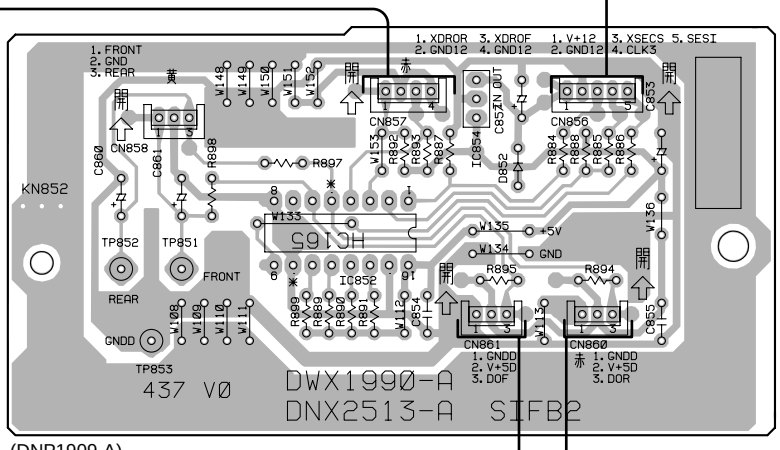

(DNP1909-A)

SIDE A

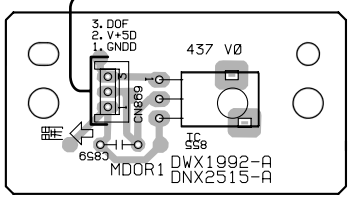

(DNP1909-A)

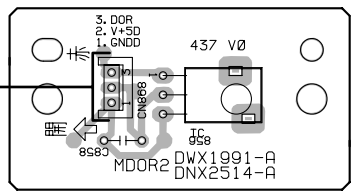

(DNP1909-A)

AC MDOR1 BOARD ASSY

AD MDOR2 BOARD ASSY

4.13 HFIF, MSTB, HMGB, MSDB, TMRB 16 and FRPB BOARD ASSYS

SIDE A

NP TMRB 16 BOARD ASSY

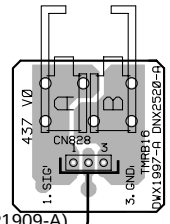

(DNP1909-A)

(DNP1904-A)

AF HMIF BOARD ASSY

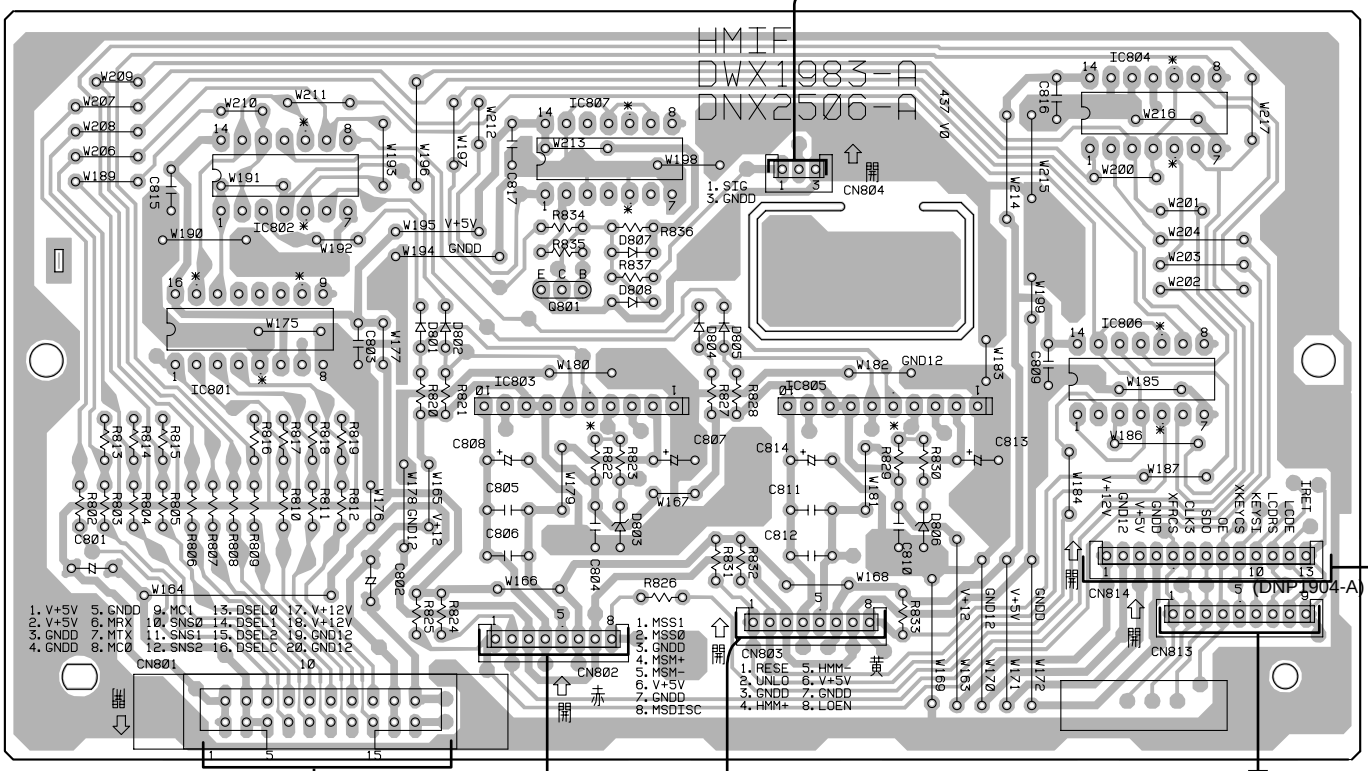

(DNP1910-A)

(DNP1904-A)

J CN107

J CN109

No. Connction

To. Load End /Un Load SW

To. Loading Motor

To. Release Sense SW

AI MSDB BOARD ASSY

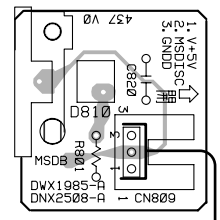

(DNP1910-A)

To. Tray Open/Close SW

To. Tray Motor

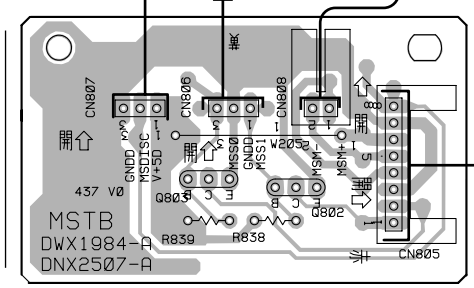

Q803
Q802

(DNP1910-A)

AG MSTB BOARD ASSY

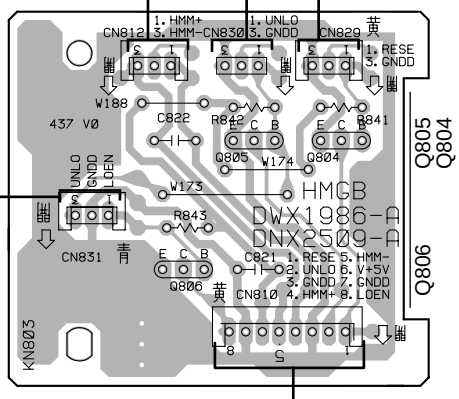

(DNP1910-A)

AH HMGB BOARD ASSY

AO FRPB BOARD ASSY

SIDE A

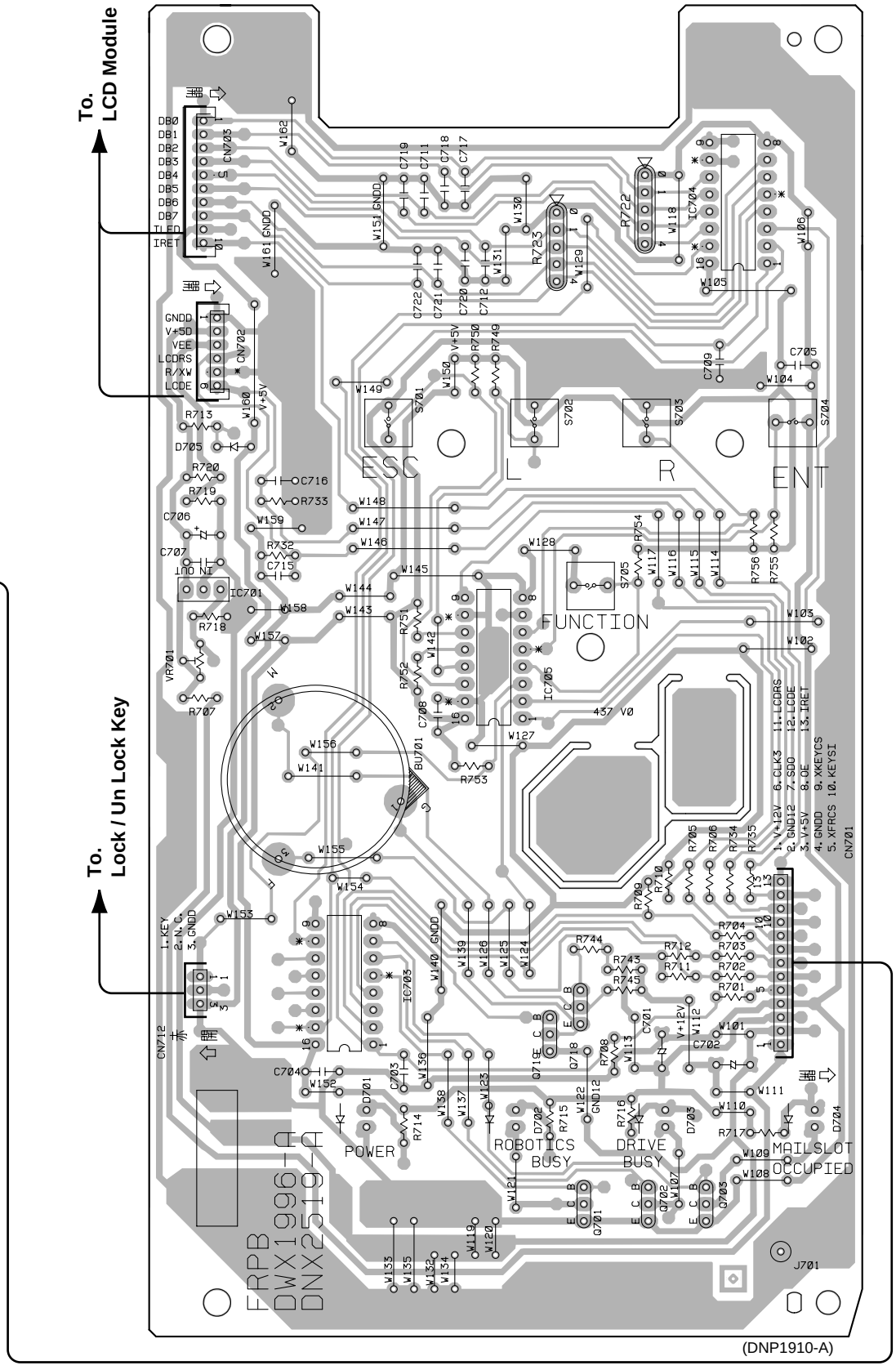

5. PCB PARTS LIST

NOTES :
- *Parts marked by "* NSP *" are generally unavailable because they are not in our Master Spare Parts List.*
- *The ⚠ mark found on some component parts indicates the importance of the safety factor of the part. Therefore, when replacing, be sure to use parts of identical designation.*
- *When ordering resistors, first convert resistance values into code form as shown in the following examples.*

Ex. 1 When there are 2 effective digits (any digit apart from 0), such as 560 ohm and 47k ohm (tolerance is shown by J = 5%, and K = 10%).

560 Ω → 56 × 10 [1] → 561 ..... RD1/4PU 5 6 1 J
47k Ω → 47 × 10 [3] → 473 ..... RD1/4PU 4 7 3 J
0.5 Ω → R50 ..... RN2H R 5 0 K
1 Ω → 1R0 ..... RS1P 1 R 0 K

Ex. 2 When there are 3 effective digits (such as in high precision metal film resistors).

5.62k Ω → 562 × 10 [1] → 5621 ..... RN1/4PC 5 6 2 1 F

LIST OF ASSEMBLIES

Mark	No.	Description	Part No.
		PWR1 BOARD ASSY	DWM2097
		├PFCB BOARD ASSY	DWR1315
		├ACFB BOARD ASSY	DWR1316
		├PIFI BOARD ASSY	DWR1317
		└PIF2 BOARD ASSY	DWR1318
		PWRB2 BOARD ASSY	DWM2098
		├PIF3 BOARD ASSY	DWR1319
		└PIF4 BOARD ASSY	DWR1320
		MMFB BOARD ASSY	DWM2093
		├MMCB BOARD ASSY	DWX1945
		└FC NB BOARD ASSY	DWX1946
		SWSE BOARD ASSY	DWM2096
		├DCMB1 BOARD ASSY	DWX1947
		├DCMB2 BOARD ASSY	DWX1948
		├DSEB BOARD ASSY	DWX1949
		├DNSE BOARD ASSY	DWX1950
		└UPSE BOARD ASSY	DWX1951
		IFB1 BOARD ASSY	DWM2094
		├DIFB1 BOARD ASSY	DWX1952
		├DIFB2 BOARD ASSY	DWX1953
		├MIF2R BOARD ASSY	DWX1955
		└MIF1F BOARD ASSY	DWX1958
		IFB2 BOARD ASSY	DWM2095
		├MIF1R BOARD ASSY	DWX1954
		├DIFB3 BOARD ASSY	DWX1956
		├DIFB4 BOARD ASSY	DWX1957
		└MIF2F BOARD ASSY	DWX1959
		ETCB2 BOARD ASSY	DWM2103
		├HMIF BOARD ASSY	DWX1983
		├MSTB BOARD ASSY	DWX1984
		├MSDB BOARD ASSY	DWX1985
		├HMGB BOARD ASSY	DWX1986
		├TMNB BOARD ASSY	DWX1994
		├IDSB BOARD ASSY	DWX1995
		└FRPB BOARD ASSY	DWX1996

Mark	No.	Description	Part No.
		ETCB1 BOARD ASSY	DWM2102
		┌TMRB 1 BOARD ASSY	DWX1966
		├TMRB 2 BOARD ASSY	DWX1967
		├TMRB 3 BOARD ASSY	DWX1968
		├TMRB 4 BOARD ASSY	DWX1969
		├TMRB 5 BOARD ASSY	DWX1970
		├TMRB 6 BOARD ASSY	DWX1971
		├TMRB 7 BOARD ASSY	DWX1972
		├TMRB 8 BOARD ASSY	DWX1973
		├TMRB 9 BOARD ASSY	DWX1974
		├TMRB 10 BOARD ASSY	DWX1975
		├TMRB 11 BOARD ASSY	DWX1976
		├TMRB 12 BOARD ASSY	DWX1977
		├TMRB 13 BOARD ASSY	DWX1978
		├TMRB 14 BOARD ASSY	DWX1979
		├TMRB 15 BOARD ASSY	DWX1980
		├VMDB BOARD ASSY	DWX1981
		├ENCB BOARD ASSY	DWX1982
		├SIFB1 BOARD ASSY	DWX1987
		├MDOT2 BOARD ASSY	DWX1988
		├MDOT1 BOARD ASSY	DWX1989
		├SIFB2 BOARD ASSY	DWX1990
		├MDOR2 BOARD ASSY	DWX1991
		├MDOR1 BOARD ASSY	DWX1992
		├CNNB BOARD ASSY	DWX1993
		└TMRB 16 BOARD ASSY	DWX1997

Mark	No.	Description	Part No.
	B PFCB BOARD ASSY		
	SEMICONDUCTORS		
⚠	IC201		DPA500F-360
	Q201		2SC1740S
	Q202, Q203		DTC124ES
	D201, D202		11EQS06
⚠	PC201		TLP621
	CAPACITORS		
⚠	C206	(3300pF/AC250V)	ACG7017
	C207		CEAT101M16
	C211, C212		CFTLA104J50
	C208		CKCYF103Z50
⚠	C203, C204	(1µF/400V)	DCE1002
⚠	C205	(180µF/400V)	DCH1106
	RESISTORS		
	Other Resistors		RD1/4PU□□□ J
	OTHERS		
⚠	CN207–CN210	(CONNECTOR 2P)	B2P3-VH
	CN211	(CONNECTOR 3P)	B3B-PH-K-S
	KN201, KN202	(EARTH METAL FITTING)	VNF1084
	A ACFB BOARD ASSY		
	COILS AND FILTERS		
⚠	L201		DTH1185
⚠	L203, L204		DTH1186
	CAPACITORS		
⚠	C219, C220	(3300µF/AC125V)	ACG7017
⚠	C201, C202	(0.01µF/AC125V)	ACG7020
⚠	C215, C216	(0.47µF/AC250V)	DCE1003
⚠	C218	(1µF/AC250V)	DCE1004
	RESISTORS		
	Other Resistors		RD1/4PU□□□ J
	OTHERS		
⚠	H1, H2	(FUSE CLIP)	AKR1004
⚠	CN201, CN203	(CONNECTOR 2P)	B2P3-VH
⚠	CN202, CN204	(CONNECTOR 4P)	B4P7-VH
	KN203	(EARTH METAL FITTING)	VNF1084
	F PIF1 BOARD ASSY		
	SEMICONDUCTORS		
⚠	TH261, TH262		RXE110
	OTHERS		
	CN264–CN267	(TAB HEADER)	1-178314-5
	CN263	(SIDE CONNECTOR 8P)	B8PS-VH
	CN261	(SIDE CONNECTOR 6P)	S6B-EH
	G PIF2 BOARD ASSY		
	SEMICONDUCTORS		
	IC271		BA10339
⚠	IC272	(1.0A/ 50V)	ICP-N25
	Q271–Q273		DTC124ES
	D271		MTZJ5.1B
	CAPACITORS		
	C272, C273		CEAT100M50
	C271, C274		CKCYF103Z50
	RESISTORS		
⚠	R277, R284		RD1/2LMF3R3J
	R282		RN1/4PC1001F
	R275		RN1/4PC1501F
	R272, R273, R279, R280		RN1/4PC3302F
	R274, R281		RN1/4PC4701F
	Other Resistors		RD1/4PU□□□ J
	OTHERS		
	CN272–CN275	(TAB HEADER)	1-178314-5
	CN276	(CONNECTOR 3P)	173979-3
	CN271	(SIDE CONNECTOR 8P)	B8PS-VH
		(PCB BINDER)	DEF1015
	CN279	(CONNECTOR 3P)	S3B-PH-K-S
	CN278	(CONNECTOR 5P)	S5B-PH-K-S
	H PIF3 BOARD ASSY		
	OTHERS		
	CN283–CN286	(TAB HEADER)	1-178314-5
	CN281, CN287	(SIDE CONNECTOR 8P)	B8PS-VH
	CN288	(CONNECTOR 3P)	S3B-PH-K-S
	I PIF4 BOARD ASSY		
	OTHERS		
	CN292–CN295	(TAB HEADER)	1-178314-5
	CN291	(SIDE CONNECTOR 8P)	B8PS-VH
	J MMCB BOARD ASSY		
	SEMICONDUCTORS		
	IC134		BH9595FP-Y
	IC102		DYW1638
	IC101		HD6415108F10
⚠	IC130, IC131, IC141, IC142, IC145 (0.6A/ 50V)		ICP-N15
⚠	IC143, IC144	(1.0A/ 50V)	ICP-N25
	IC119		NJM2904M
	IC110, IC111		NM93C86AEM8
	IC106		S-80945ANMP-DD9
	IC103		SRM2B256SLMX70
	IC133		SYM53CF92A64QFP
	IC128		TA7291P
	IC124		TC4069UBF
	IC121		TC4094BF
	IC127		TC4W53F
	IC114		TC74HC04AF
	IC115–IC118, IC125		TC74HC125AF
	IC109, IC113		TC74HC138AF
	IC104		TC74HC139AF
	IC122		TC74HC163AF
	IC120		TC74HC165AF
	IC107, IC108		TC74HC541AF
	IC123		TC74HC74AF
	IC137		TC7S08F
	IC126		TC7S86F
	IC105		TC7W04F

Mark	No.	Description	Part No.
	IC112, IC129		TC7W08F
	IC135		TC7WU04F
	Q106		2SA1037K
	Q102, Q105		2SC2412K
	Q103		2SD1664
	Q101, Q104, Q107, Q108		DTC124EK
	D101, D106, D108, D111, D146		1SS355
	D144		RB160L-40
	D119, D120		RB501V-40
	D121		UDZ12B
	D122		UDZS7.5B
	D103–D105, D107, D109, D112		UDZS8.2B
	D114–D118, D123–D135		UDZS8.2B
	D137, D138, D140–D143, D145		UDZS8.2B
⚠	TH103		DCX1033
⚠	TH101, TH102		RXE030

COILS AND FILTERS

F101, F103		VTH1012

CAPACITORS

C111, C112		CCSQCH100D50
C144, C145, C178		CCSQCH101J50
C168, C169		CCSQCH7R0D50
C150, C152		CEANP1R0M50
C109, C118, C126, C128		CEAT101M10
C101, C103, C122		CEAT101M16
C121		CEAT101M25
C172		CEAT470M10
C154		CEHAT101M50
C148		CEHAT4R7M50
C175		CKSQYB104K25
C165		CKSQYB223K50
C104, C107, C108, C110		CKSQYF104Z50
C113–C117, C119, C123–C125		CKSQYF104Z50
C127, C129–C143, C146, C147		CKSQYF104Z50
C149, C151, C153, C155		CKSQYF104Z50
C161–C164, C166, C167		CKSQYF104Z50
C170, C171, C173, C174		CKSQYF104Z50
C176, C177		CKSQYF104Z50
C156–C160		CKSQYF222Z50

RESISTORS

R116, R131, R152 (47kΩ x4)		DCN1112
R150, R151, R153, R172, R174		DCN1124
R107–R109, R127–R129 (100Ω)		DCN1125
R133, R134, R146, R171, R173 (100Ω)		DCN1125
R176–R178 (100Ω)		DCN1125
R105, R106, R110–R115, R117 (47kΩ)		DCN1126
R120, R132, R137 (47kΩ)		DCN1126
Other Resistors		RS1/10S□□□ J

OTHERS

CN106	(FPC CONNECTOR 20P)	52030-2010
CN102	(CONNECTOR 3P)	B3B-PH-K-S
CN118	(CONNECTOR 4P)	B4B-PH-K-S
CN119	(CONNECTOR 4P)	B4B-PH-K-Y
CN113	(CONNECTOR 5P)	B5B-PH-K-E
CN112	(CONNECTOR 5P)	B5B-PH-K-S
CN111	(CONNECTOR 5P)	B5B-PH-K-Y
CN104	(CONNECTOR 9P)	B9B-PH-K-E
X103	(480kHz)	CSB480EB
	(HEAT SINK)	DNG1055
X102	(40.0MHz)	DSS1087
CN105, CN107	(FA CONNECTOR 20P)	FAP-2001-1204-0BS
CN108	(FA CONNECTOR 30P)	FAP-3001-1204-0BS
CN114	(FA CONNECTOR 50P)	FAP-5001-1204-0BS
X101	(19.6608MHz)	RSS1040
IC1	(IC SOCKET 44P)	VKH1012
KN101, KN102	(EARTH METAL FITTING)	VNF1084

AP FCNB BOARD ASSY

SEMICONDUCTORS

Q861, Q862	DTA124EK
D862	SLR-56MC3F
D861	SLR-56VC3F

CAPACITORS

C861–C865	CKSQYF103Z50

RESISTORS

Other Resistors	RS1/10S□□□ J

OTHERS

CN117	(FPC CONNECTOR 30P)	30FMZ-ST
CN116	(FPC CONNECTOR 20P)	52043-2010
KN861	(EARTH METAL FITTING)	VNF1084

AJ DCMB1 BOARD ASSY

SEMICONDUCTORS

D872	SLR-342MC3F
D871	SLR-342VC3F

RESISTORS

Other Resistors	RS1/10S□□□ J

OTHERS

CN874	(CONNECTOR 3P)	173981-3
CN875	(CONNECTOR 4P)	173981-4
CN871	(CONNECTOR 30P)	30FMZ-ST
CN872	(CONNECTOR 20P)	52043-2010
KN871	(EARTH METAL FITTING)	VNF-091

AM DCMB2 BOARD ASSY

SEMICONDUCTORS

IC871–IC875	TC7S14F
Q871	2SC2412K
Q872	DTC124EK
D879–D881	1SS355
D878	GL381J
D873–D877	GP1S24

CAPACITORS

C873	CKSQYB102K50
C871, C872	CKSQYF104Z50

Mark	No.	Description	Part No.
	RESISTORS		
	R876	(100Ω)	DCN1125
	Other Resistors		RS1/10S□□□ J
	OTHERS		
	CN873	(CONNECTOR 3P)	4-173981-3
	CN876	(FPC CONNECTOR 20P)	52030-2010
	CN877	(CONNECTOR 3P)	B3B-PH-K-S
	J871	(CORD WITH PLUG)	DE005WE0
		(LED HOLDER)	RNK1795
AN	**DSEB BOARD ASSY**		
	SEMICONDUCTORS		
	IC851		TC7S04F
	Q851		PT480F
	CAPACITORS		
	C851		CKSQYF104Z50
	RESISTORS		
	VR851	(100kΩ)	DCP1081
	Other Resistors		RS1/10S□□□ J
	OTHERS		
	J851	(CONNECTOR 3P)	PG03MR4E22
AL	**DNSE BOARD ASSY**		
	SEMICONDUCTORS		
	D841, D842		GP1A15
	CAPACITORS		
	C841, C842		CKSQYF104Z50
	RESISTORS		
	Other Resistors		RS1/10S□□□ J
	OTHERS		
	J841	(CONNECTOR 4P)	PG04MR-E30
AK	**UPSE BOARD ASSY**		
	SEMICONDUCTORS		
	D831		GP1A15
	CAPACITORS		
	C831		CKSQYF104Z50
	RESISTORS		
	Other Resistors		RS1/10S□□□ J
	OTHERS		
	J831	(CONNECTOR 3P)	PG03MR-E32
S	**DIFB1 BOARD ASSY**		
	SEMICONDUCTORS		
	IC301, IC302, IC305, IC306		TC74HC125AF
	IC309, IC310, IC313, IC314		TC74HC125AF
	IC318		TC74HC138AF
	IC317, IC319		TC74HC165AF
	IC304, IC308, IC312, IC316		TC74HC74AF
	IC303, IC307, IC311, IC315		TC7W02F
	Q301–Q304		DTA124EK
	D301, D303, D305, D307, D309		DAN202K
	D319, D321, D327, D329, D331		DAN202K
	D333, D335, D345, D347, D353		DAN202K
	D355, D357, D359, D361, D371		DAN202K
	D373, D379, D381, D383, D385		DAN202K
	D387, D397, D399		DAN202K
	D310, D312, D314, D316, D318		DAP202K
	D323, D325, D336, D338, D340		DAP202K
	D342, D344, D349, D351, D362		DAP202K
	D364, D366, D368, D370, D375		DAP202K
	D377, D388, D390, D392, D394		DAP202K
	D396, D401, D403		DAP202K
	D405–D408		SML-210DT
	CAPACITORS		
	C305, C321, C337, C353		CCSQCH470J50
	C365, C370		CEAT101M10
	C366, C371		CEAT101M16
	C306–C316, C322–C332		CKSQYB102K50
	C338–C348, C354–C364, C372		CKSQYB102K50
	C374, C376, C378		CKSQYB102K50
	C301–C304, C317–C320		CKSQYF104Z50
	C333–C336, C349–C352		CKSQYF104Z50
	C367–C369		CKSQYF104Z50
	RESISTORS		
	R308, R316, R324, R332	(47kΩ x4)	DCN1112
	R306, R314, R322, R330	(100Ω)	DCN1124
	R305, R313, R321, R329	(100Ω)	DCN1125
	R343, R344, R348	(47kΩ)	DCN1126
	Other Resistors		RS1/10S□□□ J
	OTHERS		
	CN302–CN305	(CONNECTOR 20P)	FAP-2001-1202-0BF
	CN301, CN306	(CONNECTOR 30P)	FAP-3001-1204-0BS
	KN301, KN302	(EARTH METAL FITTING)	VNF1084
T	**DIFB2 BOARD ASSY**		
	SEMICONDUCTORS		
	IC501, IC502, IC505, IC506		TC74HC125AF
	IC509, IC510, IC513, IC514		TC74HC125AF
	IC517, IC519		TC74HC165AF
	IC504, IC508, IC512, IC516		TC74HC74AF
	IC503, IC507, IC511, IC515		TC7W02F
	Q501–Q504		DTA124EK
	D501, D503, D505, D507, D509		DAN202K
	D519, D521, D527, D529, D531		DAN202K
	D533, D535, D545, D547, D553		DAN202K
	D555, D557, D559, D561, D571		DAN202K
	D573, D579, D581, D583, D585		DAN202K
	D587, D597, D599		DAN202K
	D510, D512, D514, D516, D518		DAP202K
	D523, D525, D536, D538, D540		DAP202K
	D542, D544, D549, D551, D562		DAP202K
	D564, D566, D568, D570, D575		DAP202K
	D577, D588, D590, D592, D594		DAP202K
	D596, D601, D603		DAP202K
	D605–D608		SML-210DT

Mark	No.	Description	Part No.
CAPACITORS			
	C505, C521, C537, C553		CCSQCH470J50
	C565, C570		CEAT101M10
	C566, C571		CEAT101M16
	C506–C516, C522–C532		CKSQYB102K50
	C538–C548, C554–C564, C572		CKSQYB102K50
	C574, C576, C578		CKSQYB102K50
	C501–C504, C517–C520		CKSQYF104Z50
	C533–C536, C549–C552, C567		CKSQYF104Z50
	C569		CKSQYF104Z50
RESISTORS			
	R508, R516, R524, R532	(47kΩ x4)	DCN1112
	R506, R514, R522, R530	(100Ω)	DCN1124
	R505, R513, R521, R529	(100Ω)	DCN1125
	R543, R544, R548	(47kΩ)	DCN1126
	Other Resistors		RS1/10S□□□ J
OTHERS			
	CN502–CN505	(CONNECTOR 20P)	FAP-2001-1202-0BF
	CN501, CN506	(CONNECTOR 30P)	FAP-3001-1204-0BS
	KN501, KN502 (EARTH METAL FITTING)		VNF1084

P MIF1R BOARD ASSY

Mark	No.	Description	Part No.
SEMICONDUCTORS			
	IC621		TC74HC04AF
	IC622, IC624		TC74HC125AF
	IC623		TC74HC138AF
	Q621–Q624		2SC2412K
	Q625–Q632		DTA124EK
	D621–D628		1SS355
	D629–D636		SML-210DT
CAPACITORS			
	C625		CEAT101M10
	C626–C629		CKSQYF102Z50
	C621–C623, C630		CKSQYF104Z50
RESISTORS			
	R640	(47kΩ)	DCN1126
	Other Resistors		RS1/10S□□□ J
OTHERS			
	CN622–CN625	(CONNECTOR 3P)	B3B-PH-K-S
	CN627	(CONNECTOR 5P)	B5B-PH-K-S
	KN621, KN622 (EARTH METAL FITTING)		VNF1084

Q MIF2R BOARD ASSY

Mark	No.	Description	Part No.
SEMICONDUCTORS			
	IC621		TC74HC04AF
	IC622		TC74HC125AF
	IC623		TC74HC138AF
	Q621–Q624		2SC2412K
	Q625–Q628		DTA124EK
	D621–D628		1SS355
	D629–D632		SML-210DT
CAPACITORS			
	C624, C625		CEAT101M10
	C621–C623		CKSQYF104Z50
RESISTORS			
	R640	(47kΩ)	DCN1126
	Other Resistors		RS1/10S□□□ J
OTHERS			
	CN622–CN625	(CONNECTOR 3P)	B3B-PH-K-S
	CN626	(CONNECTOR 9P)	B9B-PH-K-E
	KN621, KN622 (EARTH METAL FITTING)		VNF1084

U DIFB3 BOARD ASSY

Mark	No.	Description	Part No.
SEMICONDUCTORS			
	IC301, IC302, IC305, IC306		TC74HC125AF
	IC309, IC310, IC313, IC314		TC74HC125AF
	IC318		TC74HC138AF
	IC317, IC319		TC74HC165AF
	IC304, IC308, IC312, IC316		TC74HC74AF
	IC303, IC307, IC311, IC315		TC7W02F
	Q301–Q304		DTA124EK
	D301, D303, D305, D307, D309		DAN202K
	D319, D321, D327, D329, D331		DAN202K
	D333, D335, D345, D347, D353		DAN202K
	D355, D357, D359, D361, D371		DAN202K
	D373, D379, D381, D383, D385		DAN202K
	D387, D397, D399		DAN202K
	D310, D312, D314, D316, D318		DAP202K
	D323, D325, D336, D338, D340		DAP202K
	D342, D344, D349, D351, D362		DAP202K
	D364, D366, D368, D370, D375		DAP202K
	D377, D388, D390, D392, D394		DAP202K
	D396, D401, D403		DAP202K
	D405–D408		SML-210DT
CAPACITORS			
	C305, C321, C337, C353		CCSQCH470J50
	C365, C370		CEAT101M10
	C366, C371		CEAT101M16
	C306–C316, C322–C332		CKSQYB102K50
	C338–C348, C354–C364, C372		CKSQYB102K50
	C374, C376, C378		CKSQYB102K50
	C301–C304, C317–C320		CKSQYF104Z50
	C333–C336, C349–C352		CKSQYF104Z50
	C367–C369		CKSQYF104Z50
RESISTORS			
	R308, R316, R324, R332	(47kΩ x4)	DCN1112
	R306, R314, R322, R330	(100Ω)	DCN1124
	R305, R313, R321, R329	(100Ω)	DCN1125
	R343, R344, R348	(47kΩ)	DCN1126
	Other Resistors		RS1/10S□□□ J
OTHERS			
	CN302–CN305	(CONNECTOR 20P)	FAP-2001-1202-0BF
	CN301, CN306	(CONNECTOR 30P)	FAP-3001-1204-0BS
	KN301, KN302 (EARTH METAL FITTING)		VNF1084

Mark	No.	Description	Part No.

V DIFB4 BOARD ASSY

SEMICONDUCTORS

	IC501, IC502, IC505, IC506		TC74HC125AF
	IC509, IC510, IC513, IC514		TC74HC125AF
	IC517, IC519		TC74HC165AF
	IC504, IC508, IC512, IC516		TC74HC74AF
	IC503, IC507, IC511, IC515		TC7W02F
	Q501–Q504		DTA124EK
	D501, D503, D505, D507, D509		DAN202K
	D519, D521, D527, D529, D531		DAN202K
	D533, D535, D545, D547, D553		DAN202K
	D555, D557, D559, D561, D571		DAN202K
	D573, D579, D581, D583, D585		DAN202K
	D587, D597, D599		DAN202K
	D510, D512, D514, D516, D518		DAP202K
	D523, D525, D536, D538, D540		DAP202K
	D542, D544, D549, D551, D562		DAP202K
	D564, D566, D568, D570, D575		DAP202K
	D577, D588, D590, D592, D594		DAP202K
	D596, D601, D603		DAP202K
	D605–D608		SML-210DT

CAPACITORS

	C505, C521, C537, C553		CCSQCH470J50
	C565		CEAT101M10
	C566		CEAT101M16
	C506–C516, C522–C532		CKSQYB102K50
	C538–C548, C554–C564, C572		CKSQYB102K50
	C574, C576, C578		CKSQYB102K50
	C501–C504, C517–C520		CKSQYF104Z50
	C533–C536, C549–C552, C567		CKSQYF104Z50
	C569		CKSQYF104Z50

RESISTORS

	R508, R516, R524, R532	(47kΩ x4)	DCN1112
	R506, R514, R522, R530	(100Ω)	DCN1124
	R505, R513, R521, R529	(100Ω)	DCN1125
	R543, R544, R548	(47kΩ)	DCN1126
	Other Resistors		RS1/10S□□□ J

OTHERS

	CN502–CN505	(CONNECTOR 20P)	FAP-2001-1202-0BF
	CN501	(CONNECTOR 30P)	FAP-3001-1204-0BS
	KN501, KN502 (EARTH METAL FITTING)		VNF1084

M MIF1F BOARD ASSY

SEMICONDUCTORS

	IC421		TC74HC04AF
	IC422		TC74HC125AF
	IC423		TC74HC138AF
	Q421–Q424		2SC2412K
	Q425–Q428		DTA124EK
	D421–D428		1SS355
	D429–D432		SML-210DT

CAPACITORS

	C424, C425		CEAT101M10
	C421–C423		CKSQYF104Z50

Mark	No.	Description	Part No.

RESISTORS

	R440	(47kΩ)	DCN1126
	Other Resistors		RS1/10S□□□ J

OTHERS

	CN422–CN425	(CONNECTOR 3P)	B3B-PH-K-S
	KN421, KN422 (EARTH METAL FITTING)		VNF1084

O MIF2F BOARD ASSY

SEMICONDUCTORS

	IC421		TC74HC04AF
	IC422		TC74HC125AF
	IC423		TC74HC138AF
	Q421–Q423		2SC2412K
	Q426–Q428		DTA124EK
	D421–D426		1SS355
	D430–D432		SML-210DT

CAPACITORS

	C424		CEAT101M10
	C421–C423		CKSQYF104Z50

RESISTORS

	R440	(47kΩ)	DCN1126
	Other Resistors		RS1/10S□□□ J

OTHERS

	CN422–CN424	(CONNECTOR 3P)	B3B-PH-K-S
	KN421, KN422 (EARTH METAL FITTING)		VNF1084

NA TMRB 1 BOARD ASSY

OTHERS

		(TOUCH PLATE-A)	DNH2401
		(TOUCH PLATE-B)	DNH2402
	CN813	(CONNECTOR 3P)	S3B-PH-K-S

NB TMRB 2 BOARD ASSY

OTHERS

		(TOUCH PLATE-A)	DNH2401
		(TOUCH PLATE-B)	DNH2402
	CN814	(CONNECTOR 3P)	S3B-PH-K-S

NC TMRB 3 BOARD ASSY

OTHERS

		(TOUCH PLATE-A)	DNH2401
		(TOUCH PLATE-B)	DNH2402
	CN815	(CONNECTOR 3P)	S3B-PH-K-S

ND TMRB 4 BOARD ASSY

OTHERS

		(TOUCH PLATE-A)	DNH2401
		(TOUCH PLATE-B)	DNH2402
	CN816	(CONNECTOR 3P)	S3B-PH-K-S

Mark	No.	Description	Part No.
NE TMRB 5 BOARD ASSY			
OTHERS			
		(TOUCH TERMINAL-A)	DNH2401
		(TOUCH TERMINAL-B)	DNH2402
	CN817	(CONNECTOR 3P)	S3B-PH-K-S
NF TMRB 6 BOARD ASSY			
OTHERS			
		(TOUCH TERMINAL-A)	DNH2401
		(TOUCH TERMINAL-B)	DNH2402
	CN818	(CONNECTOR 3P)	S3B-PH-K-S
NG TMRB 7 BOARD ASSY			
OTHERS			
		(TOUCH TERMINAL-A)	DNH2401
		(TOUCH TERMINAL-B)	DNH2402
	CN819	(CONNECTOR 3P)	S3B-PH-K-S
NH TMRB 8 BOARD ASSY			
OTHERS			
		(TOUCH TERMINAL-A)	DNH2401
		(TOUCH TERMINAL-B)	DNH2402
	CN820	(CONNECTOR 3P)	S3B-PH-K-S
NI TMRB 9 BOARD ASSY			
OTHERS			
		(TOUCH TERMINAL-A)	DNH2401
		(TOUCH TERMINAL-B)	DNH2402
	CN821	(CONNECTOR 3P)	S3B-PH-K-S
NJ TMRB 10 BOARD ASSY			
OTHERS			
		(TOUCH TERMINAL-A)	DNH2401
		(TOUCH TERMINAL-B)	DNH2402
	CN822	(CONNECTOR 3P)	S3B-PH-K-S
NK TMRB 11 BOARD ASSY			
OTHERS			
		(TOUCH TERMINAL-A)	DNH2401
		(TOUCH TERMINAL-B)	DNH2402
	CN823	(CONNECTOR 3P)	S3B-PH-K-S
NL TMRB 12 BOARD ASSY			
OTHERS			
		(TOUCH TERMINAL-A)	DNH2401
		(TOUCH TERMINAL-B)	DNH2402
	CN824	(CONNECTOR 3P)	S3B-PH-K-S
NM TMRB 13 BOARD ASSY			
OTHERS			
		(TOUCH TERMINAL-A)	DNH2401
		(TOUCH TERMINAL-B)	DNH2402
	CN825	(CONNECTOR 3P)	S3B-PH-K-S

Mark	No.	Description	Part No.
NN TMRB 14 BOARD ASSY			
OTHERS			
		(TOUCH TERMINAL-A)	DNH2401
		(TOUCH TERMINAL-B)	DNH2402
	CN826	(CONNECTOR 3P)	S3B-PH-K-S
NO TMRB 15 BOARD ASSY			
OTHERS			
		(TOUCH TERMINAL-A)	DNH2401
		(TOUCH TERMINAL-B)	DNH2402
	CN827	(CONNECTOR 3P)	S3B-PH-K-S
X VMDB BOARD ASSY			
SEMICONDUCTORS			
⚠	IC611		4AM12
	IC612		BA10339
	IC607, IC613		BA10393
⚠	IC617		BP51L12
	IC609		HD74HC11P
⚠	IC619	(0.4A/50V)	ICP-N10
⚠	IC616	(1.5A/50V)	ICP-N38
⚠	IC620, IC621	(2A/50V)	ICP-N50
⚠	IC615		LM2576T-15/LB03
	IC608		MC74HC32AN
	IC603, IC605, IC606, IC614		NJM4565D-A
	IC604		TC74HC04AP
	IC602		TC74HC123AP
	IC610		TC74HC14AP
	IC601		TC74HC86AP
	Q601, Q602, Q604, Q606		2SA1048
	Q608, Q609		2SA1048
	Q618		2SA1286
	Q603, Q605		2SC2458
	Q619		2SC3246
⚠	Q612, Q614		2SD2395
	Q611, Q613, Q615, Q616		DTA124ES
	Q622, Q623		DTA124ES
	Q607, Q610, Q617, Q620, Q621		DTC124ES
	Q624–Q626		DTC124ES
	D612, D613, D615–D617		11EQS06
	D601–D605, D608–D611		1SS133
	D619–D622		1SS133
	D614		F10KQ40
	D606, D607		MTZJ7.5B
⚠	TH601		RXE050
COILS AND FILTERS			
	L601		DTH1179
	L602, L603		LFA4R7J
SWITCHES AND RELAYS			
⚠	RY601–RY603		DSR1012

Mark	No.	Description	Part No.
CAPACITORS			
	C601, C642		CEAT101M10
	C657		CEAT101M16
	C643		CEAT1R0M50
	C650		CEAT221M25
	C649		CEAT331M35
	C659		CEAT471M16
	C640		CEATR47M50
	C639		CFTLA223J50
	C612, C613		CFTLA224J50
	C637, C638		CFTLA473J50
	C614		CFTLA474J50
	C607, C608		CFTLA823J50
	C622, C623, C631, C632		CKPUYB101K50
	C634, C635		CKPUYB101K50
	C602, C606, C609–C611		CKPUYF223Z25
	C615, C616, C618–C621		CKPUYF223Z25
	C624–C626, C641, C644, C645		CKPUYF223Z25
	C647, C648, C651–C656		CKPUYF223Z25
	C605		CQMA102J50
	C603, C604, C627–C630, C646		CQMA152J50
	C617		CQMA472J50
RESISTORS			
⚠	R659, R660		RD1/2LMF4R7J
⚠	R661, R662		RS3LMFR22J
	VR601 (10kΩ)		VCP1156
	Other Resistors		RD1/4PU□□□ J
OTHERS			
	H601, H602	(FUSE CLIP)	AKR1004
	CN604	(CONNECTOR 3P)	B3B-PH-K-E
	CN609	(CONNECTOR 3P)	B3B-PH-K-R
	CN608	(CONNECTOR 3P)	B3B-PH-K-S
	CN607	(CONNECTOR 3P)	B3P-VH
	CN612	(CONNECTOR 4P)	B4B-PH-K-R
	CN602	(CONNECTOR 4P)	B4B-PH-K-S
	CN606	(CONNECTOR 4P)	B4P-VH
	CN601	(CONNECTOR 20P)	FAP-2001-1204-0BS
	KN601, KN602	(EARTH METAL FITTING)	VNF1084

W ENCB BOARD ASSY

Mark	No.	Description	Part No.
SEMICONDUCTORS			
	IC618		GP1A30R
CAPACITORS			
	C658		CKPUYF223Z25
RESISTORS			
	Other Resistors		RD1/4PU□□□ J
OTHERS			
	CN613	(CONNECTOR 4P)	S4B-PH-K-S

Z SIFB1 BOARD ASSY

Mark	No.	Description	Part No.
SEMICONDUCTORS			
⚠	IC853		NJM78M05FA
	IC851		TC74HC04AP
	Q853, Q854		2SA933S
	Q858, Q859		2SC1740S
	D851		1SS133
CAPACITORS			
	C851		CEAT101M10
	C856		CEAT101M16
	C852		CKPUYF223Z25
RESISTORS			
	VR851, VR852 (100Ω)		DCP1017
	Other Resistors		RD1/4PU□□□ J
OTHERS			
	CN854	(CONNECTOR 3P)	B3B-PH-K-R
	CN855	(CONNECTOR 3P)	B3B-PH-K-S
	CN851	(CONNECTOR 5P)	B5B-PH-K-Y
	KN851	(EARTH METAL FITTING)	VNF1084

AB MDOT2 BOARD ASSY

Mark	No.	Description	Part No.
SEMICONDUCTORS			
	D854		GL514A

AA MDOT1 BOARD ASSY

Mark	No.	Description	Part No.
SEMICONDUCTORS			
	D853		GL514A
OTHERS			
	CN865	(CONNECTOR 3P)	S3B-PH-K-S

AE SIFB2 BOARD ASSY

Mark	No.	Description	Part No.
SEMICONDUCTORS			
	IC852		HD74HC165P
⚠	IC854		NJM78L05A
	D852		1SS133
CAPACITORS			
	C853		CEAT101M10
	C857		CEAT101M16
	C860, C861		CEAT220M25
	C854, C855		CKPUYF223Z25
RESISTORS			
	Other Resistors		RD1/4PU□□□ J
OTHERS			
	CN860	(CONNECTOR 3P)	B3B-PH-K-R
	CN861	(CONNECTOR 3P)	B3B-PH-K-S
	CN858	(CONNECTOR 3P)	B3B-PH-K-Y
	CN857	(CONNECTOR 4P)	B4B-PH-K-R
	CN856	(CONNECTOR 5P)	B5B-PH-K-S
	KN852	(EARTH METAL FITTING)	VNF1084

Mark	No.	Description	Part No.
AF	**HMIF BOARD ASSY**		
	SEMICONDUCTORS		
⚠	IC803, IC805		TA7291P
	IC807		TC74HC04AP
	IC802, IC804, IC806		TC74HC125AP
	IC801		TC74HC138AP
	Q801		2SC1740S
	D801, D802, D804, D805		11EQS06
	D807, D808		1SS133
	D806		MTZJ10B
	D803		MTZJ7.5B
	CAPACITORS		
	C801		CEAT101M10
	C802		CEAT101M16
	C807, C808, C813, C814		CEAT1R0M50
	C805, C806, C811, C812		CFTLA224J50
	C803, C804, C809, C810		CKPUYF223Z25
	C815–C817		CKPUYF223Z25
	RESISTORS		
	Other Resistors		RD1/4PU□□□ J
	OTHERS		
	CN814	(CONNECTOR 13P)	B13B-PH-K-S
	CN804	(CONNECTOR 3P)	B3B-PH-K-S
	CN803	(CONNECTOR 8P)	B8B-PH-K-Y
			DEF1015
	CN801	(CONNECTOR 20P)	FAP-2001-1204-0BS
AG	**MSTB BOARD ASSY**		
	SEMICONDUCTORS		
	Q802, Q803		DTC114ES
	RESISTORS		
	Other Resistors		RD1/4PU□□□ J
	OTHERS		
	CN808	(CONNECTOR 2P)	S2B-PH-K-S
	CN807	(CONNECTOR 3P)	S3B-PH-K-S
AI	**MSDB BOARD ASSY**		
	SEMICONDUCTORS		
	D810		GP1A51HR
	CAPACITORS		
	C820		CKPUYF223Z25
	RESISTORS		
	Other Resistors		RD1/4PU□□□ J
	OTHERS		
	CN809	(CONNECTOR 3P)	S3B-PH-K-S

Mark	No.	Description	Part No.
AH	**HMGB BOARD ASSY**		
	SEMICONDUCTORS		
	Q804–Q806		DTC114ES
	CAPACITORS		
	C822		CFTLA224J50
	C821		CKPUYF223Z25
	RESISTORS		
	Other Resistors		RD1/4PU□□□ J
	OTHERS		
	CN831	(CONNECTOR 3P)	B3B-PH-K-E
	CN812	(CONNECTOR 3P)	B3B-PH-K-S
	CN829	(CONNECTOR 3P)	B3B-PH-K-Y
	CN810	(CONNECTOR 8P)	B8B-PH-K-Y
	KN803	(EARTH METAL FITTING)	VNF1084
AD	**MDOR2 BOARD ASSY**		
	CAPACITORS		
	C858		CKPUYF223Z25
	OTHERS		
	CN868	(CONNECTOR 3P)	B3B-PH-K-R
			GP1U27X
AC	**MDOR1 BOARD ASSY**		
	CAPACITORS		
	C859		CKPUYF223Z25
	OTHERS		
	CN869	(CONNECTOR 3P)	B3B-PH-K-S
		(REMOTE RECEIVER)	GP1U27X
Y	**CNNB BOARD ASSY**		
	CAPACITORS		
⚠	C662	(10000PF/AC25V)	ACG7020
	OTHERS		
		(EARTH METAL FITTING)	VNF-091
K	**TMNB BOARD ASSY**		
	SWITCHES AND RELAYS		
	S791		DSH1008
	RESISTORS		
	Other Resistors		RD1/4PU□□□ J
	OTHERS		
	CN792	(CONNECTOR 4P)	S4B-PH-K-S

Mark	No.	Description	Part No.
	L IDSB BOARD ASSY		
	SWITCHES AND RELAYS		
	S792		DSX1043
	OTHERS		
		(ID SWITCH HOLDER)	DEC1805
	J791	(CONNECTOR 4P)	PG04KS-E07
	R FRPB BOARD ASSY		
	SEMICONDUCTORS		
	IC705		HD74HC165P
⚠	IC701		NJM431L
	IC703, IC704		TC4094BP
	Q718		2SC1815
	Q701–Q703, Q719		DTC124ES
	D705		11EQS06
	D701–D704		SLR-343MC
	SWITCHES AND RELAYS		
	S701–S705		DSG1056
	CAPACITORS		
	C706		CEAT101M10
	C701		CEJA101M10
	C702		CEJA101M16
	C703, C709		CKPUYB102K50
	C707, C711, C712, C715–C722		CKPUYF103Z25
	C704, C705, C708		CKPUYF223Z25
	RESISTORS		
	R722, R723		RA4S104J
	R719		RN1/4PC1001F
	VR701	(2kΩ)	DCP1021
	Other Resistors		RD1/4PU□□□ J
	OTHERS		
	CN702	(CONNECTOR 6P)	B6B-PH-K-S
		(BUZZER)	DPX1002
	CN701	(CONNECTOR 13P)	S13B-PH-K-S
	NP TMRB 16 BOARD ASSY		
	OTHERS		
		(TOUCH PLATE-A)	DNH2401
		(TOUCH PLATE-B)	DNH2402
	CN828	(CONNECTOR 3P)	S3B-PH-K-S

6. ADJUSTMENT

6.1 MECHANISM ADJUSTMENT

6.1.1 Tools for Adjustments

ⓐ : Phillips screwdriver (nominal No. 2 for M3 cross-recessed head machine screws)
ⓑ : Phillips screwdriver (nominal No. 3 for M2.6 cross-recessed head machine screws)
ⓒ : Flat-head screwdriver (nominal 5.5 × 75; for M2.6 slotted head machine screws)
ⓓ : Allen wrench (nominal 2.5 for M3 hexagon socket head cap screws)
ⓔ : Allen wrench (nominal 2 for M2.6 hexagon socket set screws)
ⓕ : Door key
ⓖ : Screw tightener
ⓗ : Adjustment disc
ⓘ : Adjustment filter
ⓙ : Flat-head screwdriver for volume adjustments (2.4mm, non-conducting type or an equivalent)
ⓚ : Adhesive
Indications ⓐ to ⓚ at the end of paragraphs in the following indicate the tools to be used in the respective steps.

6.1.2 Preparations for Adjustments

• For adjustments of the mechanical operations

(1) Remove the side panel L and R and top panel. ⓐ
(2) Open the door and pull out the magazines. ⓕ

Caution: Be sure to perform this step, as this unit operates at a high speed.

(3) Push the door switch to cancel the operation limits.
(4) Set the unit in Test mode. (Refer to 7.1.1 Test Mode)

* As adjustments are to be performed with visual observation, set the unit in a well-lit place, such as under a fluorescent lamp.
* Note that the Diag-robotics-individually in manual elevating operation mode activates even when the D guides have been protruded.
* Sufficient care must be taken as the chuk block is protruded if you rotate the turntable clockwise in a Diag-robotics-individually in manual loading operation. Especially, it causes a damage if protruded in a location other than the disc rack and player.

• For sensitivity adjustment of the carriage base disc sensor

(1) Remove the side panel L and R and the top panel. ⓐ
(2) Set the unit to Test mode. ⓕ
(Refer to 7.1.1 Test Mode)

• For carrier frequency adjustment of the magazine disc out-of-position sensor

(1) Remove the side panel R. ⓐ

• For sensitivity adjustment of the magazine disc out-of-position sensor

(1) Remove the side panel L and R and the top panel. ⓐ
(2) Open the door and pull out the under magazine. ⓕ

6.1.3 Adjustment Methods

- The figures in brackets, such as [001], in the following represent the position of the carriage base displayed in the lower row of the mode indicator when you move it up or down operation mode.
- To move the carriage base up or down by hand, remove the side panel at lower right and turn the pulley or the belt of the vertical drive motor.
  Upward with counterclockwise rotation and downward

6.2 ADJUSTMENT FOR MECHANICAL OPERATIONS

6.2.1 Height Adjustment of the D Guides L and R

• Purpose:
To adjust the top height of the D guides with respect to the reference surface of the carriage base.
• Method:
Turn the D guide adjustment screw (DG height pin) on the carriage base.
• Contents:
Adjust the top heights of the D guides L and R on the carriage base.
Adjust the upper surface of the D guides to 31 ± 0.2mm higher than the reference surface of the carriage base.
• Preparation:
Set the unit to Diag-robotics-individually in Manual elevating operation mode.
• Adjustment point:
DG height pin

• Left Side

(1) Move the carriage base to a position (around [175] to [200]) which permits it to be seen from the front and the loading motor to be rotated.
(2) Rotate the turn table counterclockwise in the Diag-robotics-individually in Manual operation mode.

Caution: Do not turn it clockwise to avoid a damage.

(3) Stop the rotation when the turn table has been turned about 70 degrees from the front.
(4) Using a measuring device, confirm that the distance between the upper surface of the carriage base and the upper surface of the D guide is 31 ± 0.2mm.
If not, adjust the D guide adjustment screw. ⓒ
(5) Lock the screws when the adjustment is completed. ⓚ

• Right side

(1) As with the left side, rotate the turn table counterclockwise and stop it when it has been rotated about 290 degrees from the front.
(2) The subsequent procedures are the same as for the left side.

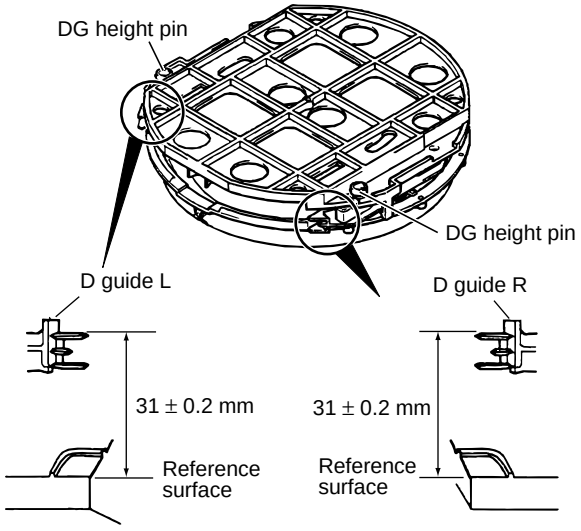

Fig. 1 Height adjustment of the D-guides

6.2.2 Right and Left Adjustment of the Carriage Base

• Purpose:
To adjust the carriage base so that it becomes right and left horizontal to the main unit.
• Method:
Move up or down the belt stopper which connects between the elevator belt (on the right side) and the carriage base by eccentric bushing.
• Contents:
Adjust the height of the movable mounting position at right side against the fixed belt stopper at left side.
Adjust the levelness of the carriage base so that the difference between the right and left is less than 0.3mm.
• Preparation:
Set the unit to Diag-robotics-individually in Manual elevating operation mode.
Prepare the magazine. (Be sure not to set the upper four discs.)
• Adjustment point:
Eccentric bushing

∗ Be sure to check the adjustment position is around [200].
∗ Confirm the height of the D guides in advance. Be sure to check the height of the interrupter UP when the adjustment is completed.

(1) Move the carriage base to [151] to [170].
(2) Set the magazine only.
(3) Manually rotate the loading motor to once bring the D guides out to the front, then rotate it in the reverse direction until the D guides no longer touch the magazine (set to a state just before the turn table would start to rotate).

Caution: Check that the D guide does not overlap the magazine as viewed from directly above. Moving the carriage base up and down with such overlap will damage the unit.

(4) Move the carriage base to [199].
(5) While observing through the hole at the top of the magazine, manually move the carriage base up and down to align the slot of the disc rack R on the right side with the right side of the D guide.
(6) Confirm visually that the difference in height between the slot of the disc rack L on the left side and the left side of the D guide is less than 0.3mm. If not, perform the following adjustment.

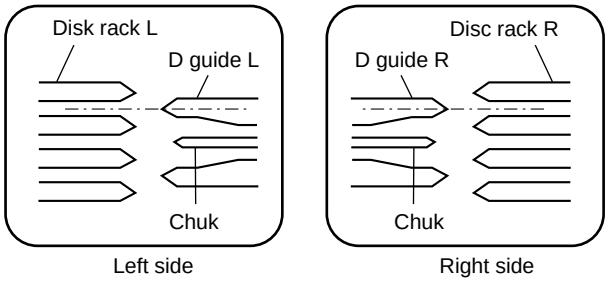

Fig. 2

Note: Do not use the position of the chuck, as it may not be accurate.

(7) Temporarily move the carriage base down (to around [163]) to enable adjustment of the eccentric bushing.
(8) Loosen the hexagon coupling bolt for fixing, then temporarily tighten it. ⓓ

(9) If the left side is lower, turn the eccentric bushing counterclockwise as necessary, and if the left side is higher, turn it clockwise as necessary. (clamping torque: 7kg-cm) ⓒ,ⓓ
(10) Perform steps (4) to (6) for verification. If the difference still exceeds 0.3mm, repeat steps (7) to (9) and (4) to (6).

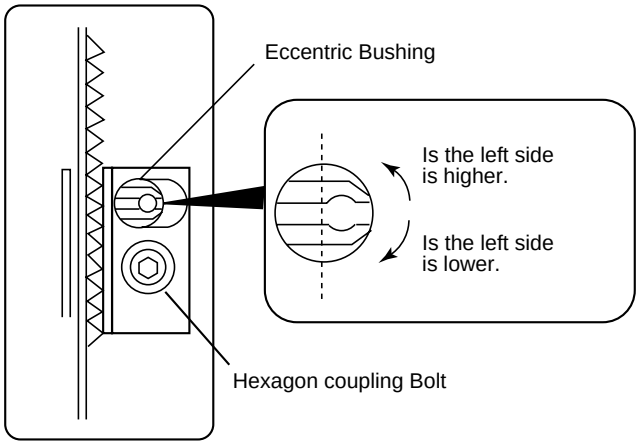

Fig.3 Hole for adjustment of the Side Frame L block (when the carriage base position is [163])

6.2.3 Front and Back Adjustment of the Carriage Base

• Purpose:
To adjust the carriage base so that it becomes front and back horizontal to the main unit.
• Method:
Adjust by turning the front and back adjustment screw on the carriage base.
• Contents:
Adjust the levelness of the carriage base so that the difference between the front and back is less than 0.3mm.
• Preparation:
Set the unit to Diag-robotics-individually in Manual elevating operation mode. Prepare the two magazines.
• Adjustment point:
Front and back adjustment screw
∗ Be sure to check the adjustment position is around [200].
∗ Confirm the height of the D guides in advance. Be sure to check the height of the interrupter UP when the adjustment is completed.

(1) Move the carriage base to [151] to [170].
(2) Set the magazine to fourth position from under the front and rear.
(3) Manually rotate the loading motor to once bring the D guides out to the front, then rotate it in the reverse direction until the D guides no longer touch the magazine (set to a state just before the turn table would start to rotate).

Caution: Check that the D guide does not overlap the magazine as viewed from directly above. Moving the carriage base up and down with such overlap will damage the unit.

(4) Move the carriage base to [199].
(5) While observing through the hole at the top of the magazine, manually move the carriage base up and down to align the slot of the disc rack R on the right side with the right side of the D guide.
(6) Manually rotate the loading motor to bring the D guides out to the rear.
(7) While observing through the hole at the top of the magazine, confirm that the slot of the disc rack R align with the D guide..
(8) If not, adjust with the front and back adjustment screw. ⓔ
(9) If the D guide at rear side is higher, turn the adjustment screw counterclockwise.
If the D guide at rear side is lower, turn the adjustment screw clockwise.
(10) Lock the screws when the adjustments are completed. ⓖ

6.2.4 Height Adjustment of the Interrupter UP

• Purpose:
To align the stop position of carriage base elevation with the disc magazine.
• Method:
Adjust by turning the interrupter UP adjustment screw.
• Contents:
Adjust the height of the interrupter UP to align the height at which the carriage base stops with the magazine.
• Preparation:
Set the unit to Diag-robotics-individually in Manual elevating operation mode.
Prepare the magazine. (Be sure not to set the upper four discs.)
• Adjustment point:
Height adjustment screw
The LED for monitoring the interrupter output is located on the FCNB Unit (DN interrupter: green).
∗ Confirm the height of the D guides in advance.

(1) Move the carriage base to [199].
(2) Manually rotate the loading motor to once bring the D guides out to the front. (Set to a state just after the D guides have come out from the carriage base. Do not move the chuck outward.)
(3) While observing the green LED, manually move the carriage base slightly up and stop it immediately when the green LED lights up.
If the green LED is already lit, first move the carriage base slightly down.
(4) When the magazine is slowly inserted, it engages with the D guides just before it locks. While observing through the hole at the top of the magazine, confirm that the D guides are not moved by the magazine. If they move, perform the following adjustment.
(5) If the D guides move, adjust the position of green LED lights up by the interrupter UP height adjustment screw. ⓔ
(6) Manually set the carriage base to the position where the magazine does not touch the D guides when it moves in and out in the above-mentioned way.
→ While moving the carriage base up or down little by little, find a position where the D guides do not move even when the magazine is moved in and out.
→ Find a position of the carriage base relative to the magazine. As this position is used as the reference for adjustment of the interrupter DN, do not move or even touch the carriage base after its position is determined.
(7) Turn the interrupter UP height adjustment screw clockwise and stop it when the green LED goes off. (If the LED was not lit when starting the adjustment, first turn the screw counterclockwise to light the LED.) ⓔ
(8) Further turn the screw 180 degrees (170 to 190 degrees) clockwise then stop it.

< Principles >

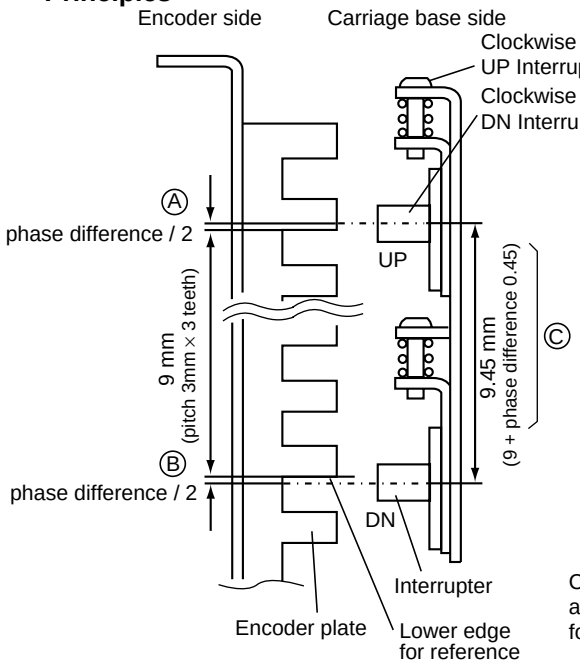

- The figure to the left shows the center of the stop position of the carriage base. The purpose of the adjustment is to obtain this status. The stop position requires Ⓐ > 0 and Ⓑ > 0.
  This means that the stop position range must be ± phase difference/2 and the stop-position range must be equal to the phase difference. Thus, as shown in the figure to the left, set DN (reference side) to phase difference/2 below and UP (adjusting side) to phase difference/2 above with respect to the lower edge of the encoder slit.
- Adjust Ⓐ in the height adjustment. Once align the target lower edge of the encoder slit with the position of DN (= the position of the carriage base) [step (7)], then move it up by the amount of Ⓐ [step (8)].

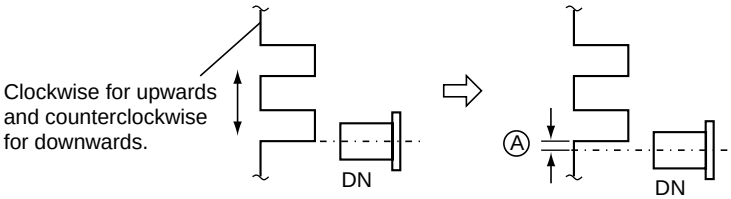

∗ The interrupters light when the light is blocked.

Fig. 4 Adjustment model view

6.2.5 Relative Adjustment of the UP-DN Interrupter

- Purpose:
  To adjust the stop position range of carriage base elevation to 0.45 mm.
- Method:
  Adjust by turning the relative adjustment screw on the carriage base.
- Contents:
  Set the interrupter UP 0.45mm than the interrupter DN. Adjust the phase difference (relative height) between UP and DN to 0.45 ± 0.05mm.
- Preparation:
  Set the unit to Diag-robotics-individually in Manual elevating operation mode.
- Adjustment point:
  Relative adjustment screw
  The LEDs for monitoring the interrupter outputs are located on the flexible relay board (interrupter UP: green, interrupter DN: red).

(1) Move the carriage base upward (to around [200]) to permit easy access to the relative adjustment screw.
(2) While observing the green LED, slowly move the carriage base up by hand and stop it immediately when the green LED lights.

Important: Be sure to stop the carriage base in an upward movement.

(3) Turn the relative adjustment screw clockwise and stop it when the red LED lights. (If the LED is already lit when starting the adjustment, once turn the screw counterclockwise to turn the LED off.) ⓔ
(4) Verification: Once move the carriage base down until the red LED goes off, then slowly move it up again to check that the two LEDs simultaneously light. If they do not light simultaneously, repeat the adjustment from step (2).
(5) While observing the red LED (interrupter), slowly move the carriage base up or down by hand and stop it immediately when the red LED lights. Be sure to stop the carriage base in an upward movement.
(6) Form the state at the moment when the red LED lights, turn the relative adjustment screw clockwise 360 degrees (350 to 370 degrees).
(7) Lock the screws when the adjustment is completed. ⓖ

< Principles >

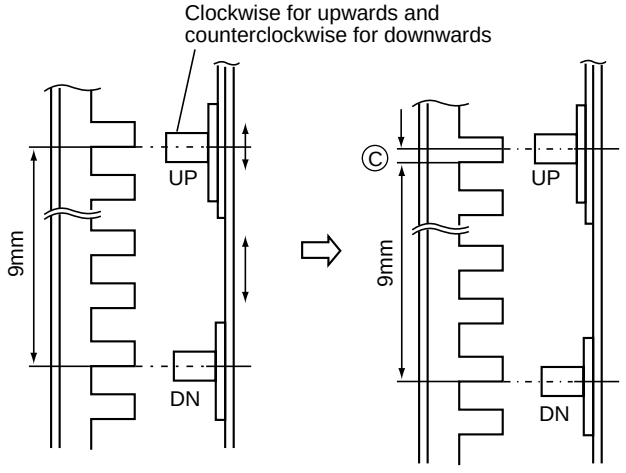

∗ The interrupters light when the light is blocked.

Adjust Ⓒ (Ⓐ + Ⓑ) in the UP-DN relative adjustments.
After aligning the DN interrupter with the lower edge of the encoder slit (step 2), temporarity align the interrupter UP also with the lower edge (step 3).
After confirming that the DN and UP interrupters are in place (step 4), align the interrupter DN with the lower, edge again (step 5) and move the interrupter UP upwards by the amount of Ⓒ (step 6).

Fig. 5 Adjustment model view

6.2.6 Verification of Operations After Adjustments

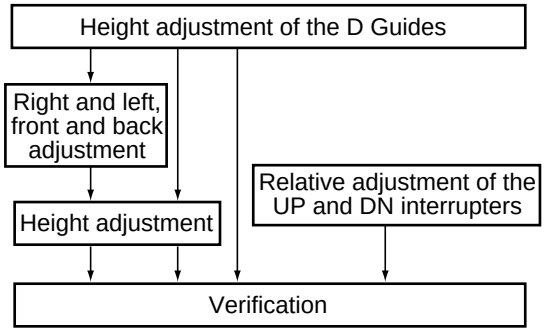

- Be sure to confirm the height of D guides before the right and left adjustment and front and back adjustment of the carriage base and the height adjustment of the interrupter UP.
- Be sure to check the height of the interrupter UP when the right and adjustment and front and back adjustment of the carriage base have been performed.
- Perform the relative adjustment of the UP and DN interrupters in conjunction with other adjustments as required.

Perform the verification of operations after the height adjustment of the D guides, right and left adjustment and front and back adjustment of the carriage base, height adjustment of the interrupter UP, or relative adjustment of UP-DN interrupters is completed.

(1) Set the unit to Diag-robotics-individually in Manual elevating operation mode.
(2) Move the carriage base to [199].
(3) Set the upper magazine only. (Be sure not to set the upper four discs.)
(4) Rotate the turn table in the Diag-robotics-individually in Manual loading operation mode to move the D guides out towards the front and rotate the table in the reverse direction to return to a position where the magazine does not touch the D guides.
→ Set to the state just before the turntable starts rotating.

Caution: A manual loading operation may not be allowed, depending on the position of the carriage base or turn table. Be sure to just lightly touch (or momentarily push) the switch when operating it.

(5) Observe through the hole at the top of the magazine to check that there is no misalignment in gear teeth or in height between the slot of the disc rack R on the right side and the right side of the D guide or between the slot of the disc rack L on the left side and the left side of the D guide.

6.3 SENSITIVITY ADJUSTMENT OF THE CARRIAGE BASE DISC SENSOR

• Purpose:
To adjust the sensitivity of the disc sensor of the carriage base.
• Method:
Adjust VR851 on the DSEB Unit
• Contents:
Adjust the phototransistor output of the light-receiving block.
• Preparation:
Prepare the adjustment disc.
• Adjustment point:
Semifixed volume control (VR851, DSEB Unit)
Use the dot at the lower right end of the mode indicator for monitoring the sensor output.

• How to enter the adjustment mode:
(1) Set key to [UNLOCK] position.
(2) Press the [FUNCTION] and [↑→] keys simultaneously for four seconds.
(3) "Entering to the Tset Mode!!OK?" is displayed, then press [ENT] key.
(4) Select "Diag" and press [ENT] key.
(5) Select "Robotics" and press [ENT] key.
(6) Select "Collectively" and press [ENT] key.
(7) Select "Step-by-step" and press [ENT] key.
(8) "Source Address ? #001(M1-01)" is displayed.
(9) Specify the target address with [←↓] and [↑→] keys and press [ENT] key.
(10) Pull the disc in the carriage block when pressing the [ENT] key in the display of "Disc Pick-up fwd #xxx".
(11) "Dest. Address ? Bay #01" is displayed, then press [ESC] key.
(12) Return the disc to the magazine when pressing the [ESC] key in the display of "Disc Release rev#xxx".

• Adjustment procedure:
(1) Set the adjustment disc to the magazine and install the magazine in the location where the work is easy to do.
(2) Set the test mode to Step operation mode.
(3) Move the carriage base to the address of disc position.
(4) Pull the adjustment disc in the carriage base.
(5) Confirm the display, and turn VR851 on the DSEB Unit to the clockwise a little when there is a disc (* is displayed in the lower center of LCD), and turn it to the counterclockwise a little when there is a no disc.
(6) Return the adjustment disc to the magazine.
(7) Repeat the steps 4 to 6 until the display of the disc existence changes, and adjust it to be within 10 degrees from the changing point.

6.4 SENSITIVITY ADJUSTMENT OF THE MAGAZINE DISC OUT-OF-POSITION SENSOR

• Purpose:
To adjust the LED output of the light-emitting block so that the threshold value set to the combined screen factor of the adjustment disc and filter.
• Method:
Adjust VR852 (FRONT) and VR851 (REAR) on the SIFB2 Unit
• Contents:
Adjust the voltage by connecting the voltage measuring instruments (voltmeter or multimeter, etc.) to TP851 (FRONT) and TP852 (REAR).

• Preparation:
(1) Prepare the adjustment disc and adjustment filter.
(2) Remove the all magazines (including hyper magazine) and drives.
(3) Move the carriage base to the initial position (address 3).
(4) Connect a voltmeter (or multimeter, etc.) between TP851 (FRONT) or TP852 (REAR) and TP853 (GNDD) on the SIFB2 Unit.

• Adjustment point:
Semifixed volume control (VR852: FRONT, VR851: REAR)
Connect a voltmeter (or multimeter, etc.) to TP851 (FRONT) and TP852 (REAR).

• How to enter the adjustment mode:
(1) Set key to [UNLOCK] position.
(2) Press the [FUNCTION] and [↑→] keys simultaneously for four seconds.
(3) "Entering to the Tset Mode!!OK?" is displayed, then press [ENT] key.
(4) Select "Sensor" and press [ENT] key.
(5) Select "Front sensor" or "Rear sensor" and press [ENT] key.
(6) "Front (Rear) sensor working" is displayed, then enter the disc sensor adjustment mode.

• Adjustment procedure:
(1) Remove the second from the carriage base guard.
(2) Set the test mode to Disc sensor adjustment mode.
(3) Set the adjustment disc and adjustment filter so that it blocks the optical axis. (Insert the adjustment disc and filter to slot 50 of the magazine and set to magazine bay #7 at front side and set to magazine bay #16 at rear side.)
(4) Adjust VR852 (FRONT) and VR851 (REAR) on the SIFB2 Unit so that the voltage of TP851 (FRONT) and TP852 (REAR) to the adjustment value which is mentioned in the adjustment disc ± 0.2V.

6.5 ELEVATING SPEED ADJUSTMENT

• Purpose:
To adjust the elevating speed of the carriage base.
• Method:
Adjust VR601 on the VMDB Unit
• Contents:
Adjust the phototransistor output of the light-receiving block.
• Preparation:
Connect an oscilloscope (10:1 probe) to TP601 (MMOUT) and TP602 (GND) on the VMDB Unit.

• How to enter the adjustment mode:
(1) Set key to [UNLOCK] position.
(2) Press the [FUNCTION] and [↑→] keys simultaneously for four seconds.
(3) "Entering to the Tset Mode!!OK?" is displayed, then press [ENT] key.
(4) Select "Diag" and press [ENT] key.
(5) Select "Robotics" and press [ENT] key.
(6) Select "Individually" and press [ENT] key.
(7) Select "Elevation" and press [ENT] key.
(8) Select "Manual" and press [ENT] key.
(9) Carriage base moves to up and down with [←↓] and [↑→] keys and generates a pulse from the rotary encoder.

• Adjustment procedure:
(1) Set VR601 on the VMDB Unit to the mechanical center.
(2) Turn the elevating motor by using the elevating manual operation and generates a pulse from the rotary encoder.
(3) Adjust VR601 so that the pulse width of TP601 (MMOUT) to 13 ± 0.3 μsec.

Caution: Be carful because the carriage base is moved at high speed by the mode.

6.6 LCD POWER SUPPLY VOLTAGE ADJUSTMENT

• Purpose:
To adjust the power supply voltage of the LCD module.
• Method:
Adjust VR701 on the FRPB Unit
• Contents:
Connect a voltmeter (or multimeter, etc.) between CN702-pin 2 (VEE) and pin 1 (VSS), and adjust the voltage.
• Preparation:
(1) Remove the FRPB Unit from the front panel. (LCD module and key SW unit are useless.)
(2) Connect the power supply of 12V ± 5% between CN701-pin 1 (V12) and pin 2 (GND12), and connect the voltmeter between CN702-pin 2 (VEE) and pin 1 (VSS).
• Adjustment procedure:
Semifixed volume control (VR701)
Connect the voltmeter (or multimeter, etc.) between CN702-pin 2 (VEE) and pin 1 (VSS).
(1) Set VR701 on the FRPB Unit to the mechanical center.
(2) Apply a 12V power supply.
(3) Adjust VR701 so that the voltage of CN702-pin 2 (VEE) to 5 ± 0.05V.

7. GENERAL INFORMATION

7.1 DIAGNOSIS

7.1.1 TEST MODE

■Entering Test Mode

(1) After the power is turned on and the initialization of the mechanism ("Initializing" is displayed) is completed, the following indication is displayed.

```
Robotics   ready
Drive1   no disc
```

The unit is in User mode.

(2) Unlock the keys and press the [FUNCTION] key.
The following indication is displayed:

```
<Inquiry>   ID=6
  Revision 1.08B
```

The unit enters System management mode.

(3) Press the [FUNCTION] and [↑→] keys simultaneously for 4 seconds. The following indication is displayed:

```
Entering to the
Test mode!! OK?
```

Asking if you wish to enter Test mode.

(4) Press the [ENT] key. The following indication is displayed:

```
Select the mode.
Diag,Demo,Info
```

The unit enters Test mode.
The cursor is blinking on D (Diag).

(5) Move the cursor to the mode of your choice by pressing the [↑→] or [←↓] key, then press the [ENT] key.

■Diag mode

```
Robotics,Drive
or Sensor?
```

Robotics

```
Individually or
Collectively?
```

Individually
To Manual/Auto mode

- **Elevation Manual/Auto**
  (Elevation Manual/Auto operation mode)
- **Loading Manual/Auto**
  (Loading Manual/Auto operation mode)
- **Flip-unit Manual/Auto**
  (Flip-unit Manual/Auto operation mode)
- **Clamper Manual/Auto**
  (Clamper Manual/Auto operation mode)
- **Mailslot Manual/Auto**
  (Mailslot Manual/Auto operation mode)
- **Hyper-Mag. Manual/Auto**
  (Hyper magazine Manual/Auto operation mode)

Collectively
To Step mode

Drive
To Drive mode

Sensor
To Sensor mode

■Specifications of Demo mode

(1) Move the cursor to Demo by pressing the [↑] key, then press the [ENT] key to display the Demo Mode Select screen. Select Demo 1, 2 or 3 mode by pressing the [↑→] or [←↓] key.

Demo 1

```
All Drive Demo?
need dsc hyp1-16
```

In this mode, a disc is carried to the drive unit, the drive unit is started, then stops.
Discs must be set in Hyper magazines #1 to #16.

[↑→] [↓↑] [←↓]

Demo 2

```
DiscChange Demo?
    need 2 discs
```

In this mode, two discs are carried one after another to one drive unit.
Two discs are required.

[↑→] [↓↑] [←↓]

Demo 3

```
All Slot Aging?
need disc hyp1-4
```

In this mode, discs are carried to all magazines installed, one after another.
Discs must be set in Hyper magazines #1 to #4.

(2) Press the [ENT] key to enter the demo mode you have selected.

● Demo 1

Preparation :

Set 16 discs each into Hyper magazines #1-16 (from the lowest to the 16th slots).

Operational steps :

(1) The disc in Hyper magazine #1 is carried and inserted into the rear Bay #1 drive unit.
(2) The disc in Hyper magazine #2 is carried and inserted into the rear BAY #2 drive unit.

⋮

(16) The disc in Hyper magazine #16 is carried and inserted into the rear Bay #16 drive unit.
(17) All the transferred discs start rotating. Demo 1 completed.

Indications :

```
Hyper-Drive DEMO
          START?
```

OK

```
Hyper-Drive DEMO
            ACT
```

A disc is being carried to the drive unit.

[↓] Operation completed.

```
Hyper-Drive DEMO
            END
```

Operation completed.

Note: If a drive unit is not installed at the rear Bay, the disc is carried to the location where the specified drive unit should be installed then returned to the original Hyper magazine.

● Demo 2

Preparation :

Set two discs each into Disc slots #001 and #750.

Operational steps :

(1) The disc in slot #001 is carried to the rear Bay #4 drive unit.
(2) The disc in the rear Bay #4 drive unit is returned to slot #001.
(3) The disc in slot #750 is carried to the rear Bay #4 drive unit.
(4) The disc in the rear Bay #4 drive unit is returned to slot #750.

Note: The above steps (2) to (4) constitute one cycle.

Modifiable setting items :

• Disc slot number for the first disc (Default: #001)
• Disc slot number for the second disc (Default: #750)
• Bay number of the drive unit (Default: Bay #4)

Note: The modified settings will be retained until the power is turned off.

Indications

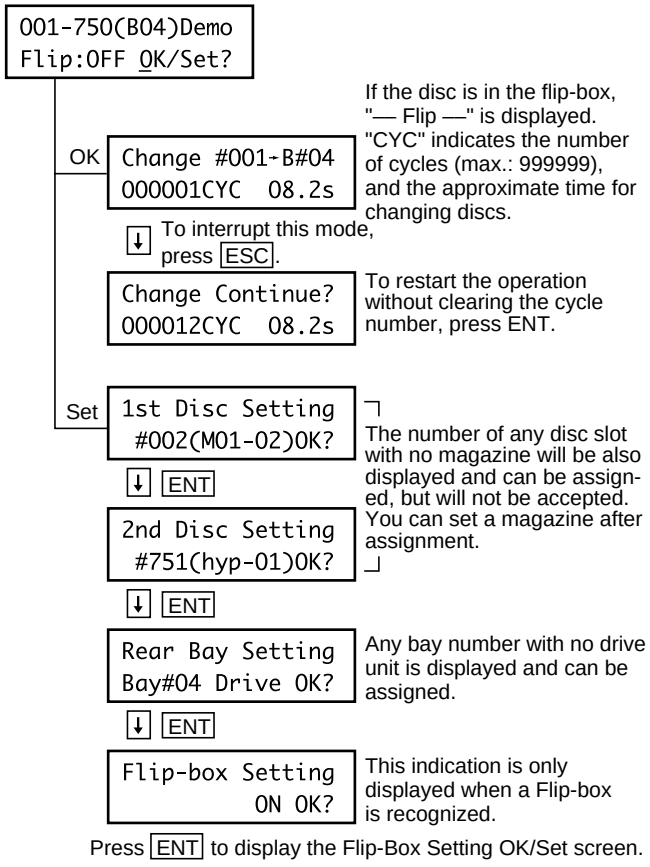

Note 1: In the following cases, the setting will not be accepted:
- When a specified magazine is not installed. (Even the default setting will not be accepted if the magazine is not installed.)
- When a disc has been set in the specified drive unit.

Note 2: The approximate time for changing discs is calculated according to the time from just after the spinning-stop process is completed until just before the spinning-start process is started. (Although the drive is not controlled in this mode, the time just before a drive-control command is processed is included.)
The time is rounded off to two decimal places.

Note 3: If the specified disc is not set in the specified magazine, error EF8 is generated.

● Demo 3

Preparation :

• Set four discs each into Hyper magazines #1 to #4 (from the lowest to the fourth slots).
• Discs should not be inserted into other Hyper magazines.

Operational steps :

(1) The discs in Hyper magazines #1 to #4 are carried to Minimum magazines #1 to #4.
(2) The disc in Minimum magazine #3 (the second disc from the top) is carried to the Hyper magazine #5.
(3) The disc in Minimum magazine #1 (the lowest disc) is carried to Hyper magazine #3.
(4) The disc in Minimum magazine #4 (the upper disc) is carried to Hyper magazine #6.
(5) The disc in Minimum magazine #2 (the third disc from the top) is carried to Hyper magazine #4.

Note: Reverse steps (2) through (5) above, and when all discs return to Minimum magazines #1 to #4, one round is completed. Repeat this for the 2nd round.

(6) The discs in Minimum magazines #1 to #4 are carried to Hyper magazines #1 to #4.

Modifiable setting items :

• Possible number of rounds: 1 to 999 (default: 2 rounds).
Infinity can be also assigned.

Note: The modified setting is retained until the power is turned off.

Indications :

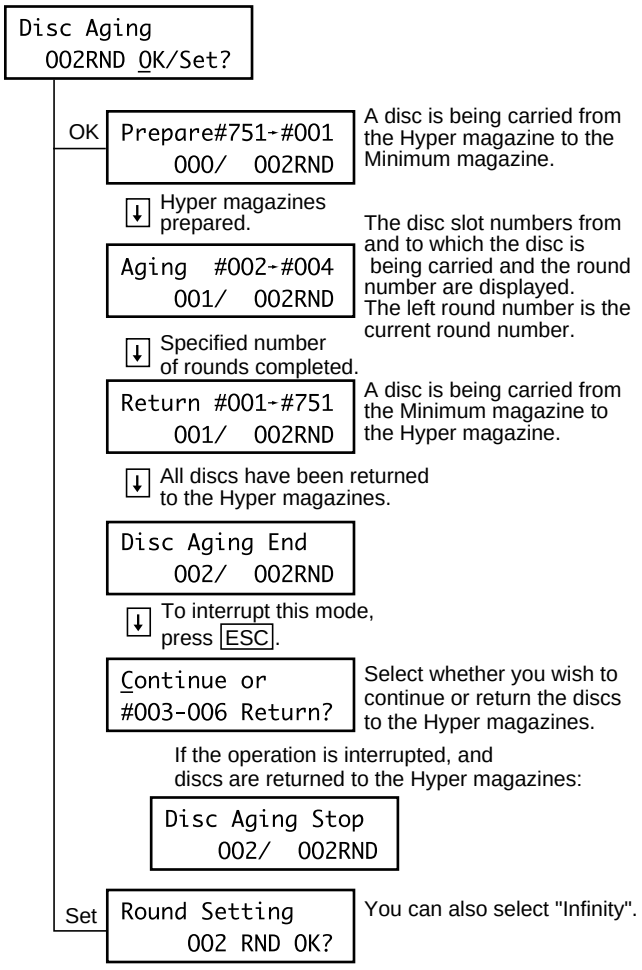

Note: "OK" is not accepted if the Hyper magazines are not inserted.

7.1.2 TROUBLE SHOOTING

1. Basic Concepts

A condition in which normal changer operation cannot be continued is defined as "error status." When SCSI commands are used for operations, a check condition is returned to the host computer if an illegal command is sent. However, if normal operation can be executed by sending a legal command, this is not "error status."

An error with which operation of the disc-carriage mechanism cannot be continued is called a "fatal error." When a fatal error occurs, the error status cannot be released even if you turn the power off and on again. This is intended to eliminate secondary damage to the disc or the mechanism caused by starting initialization without removing the cause of the error. Be sure to open the door and check the internal condition of the changer to find the cause of the error, and take appropriate action. Initialization will start when the door is closed.

2. Indication and Buzzer upon Error Generation

When an error is generated, the error code and descriptions flash on the display window. The buzzer also sounds in synchronization with the flashing of the display. When you press any key, the buzzer stops sounding. However, no subsequent operation can be performed without first operating the lock release key. This means that the operation to release the error can be performed only by the system administrator who manages the key or by service personnel.

3. Operation Guidance upon Fatal Error Generation

As the door needs to be opened, one-touch shift to Door submode of System-administrator mode is enabled.

● When no disc remains in the drive

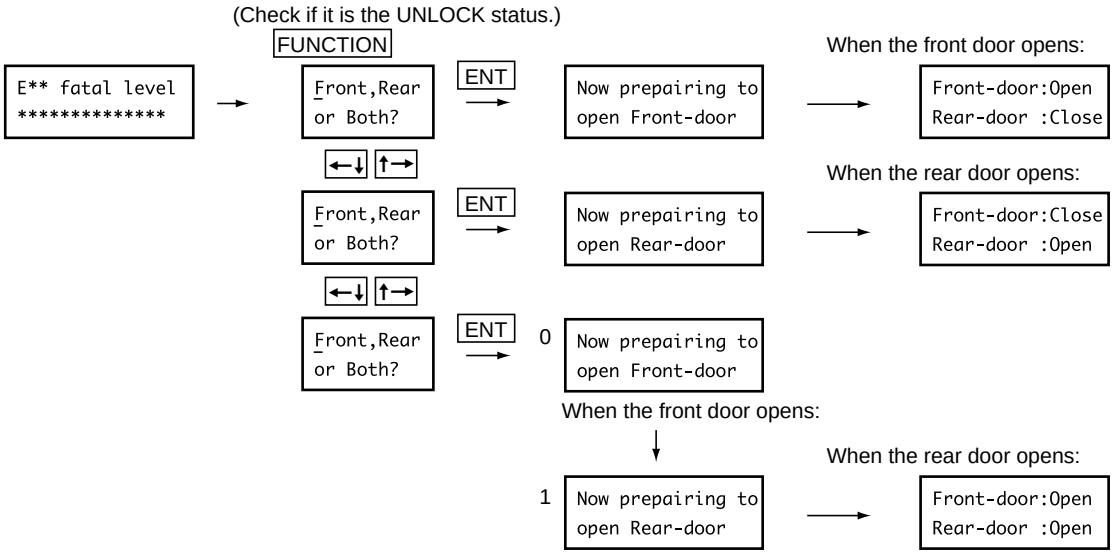

● When a disc remains in the drive

When a disc is used in the drive, the drive can be used even if an error occurs in the disc carriage mechanism. However, the door cannot be opened without stopping the drive. The system administrator should determine which takes priority, error canceling or continued use of the drive.

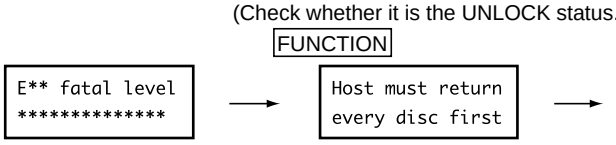

- If the host computer is connected, issue a "Rezero Unit" command. The drive will stop, and the unit will shift to Door submode. The disc will not be returned.
- If the host computer is not connected, once turn off the power, then turn it on again.

4. Quitting from Nonfatal Error Status (Mainly Errors with the Drive)

● When an error occurs during mechanism initialization:

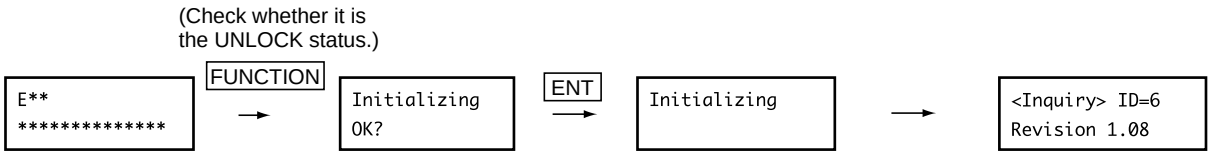

- If the indication returns from "Initializing" to an error indication again, it is necessary to manually open the door and remove the drive that caused the trouble. Following "7.1.3 DISASSEMBLY", open the rear door, disconnect the drive mounted on the drive bay (Bay 1 to Bay 16) having the corresponding number to the suffix (0 to F) of the error code, then remove it. When you close the door, initializing of the mechanism begins.
- Sufficient care must be taken when checking the drive, since disconnecting/reconnecting the changer interface is equivalent to disconnecting/reconnecting the entire drive unit.
- If a disc remains in the removed drive, manually take it out. NEVER return the drive with a disc remaining inside to the changer. As the disc is not detected, and this may cause a secondary problem.

● When an error occurs in a mode other than mechanism initialization:

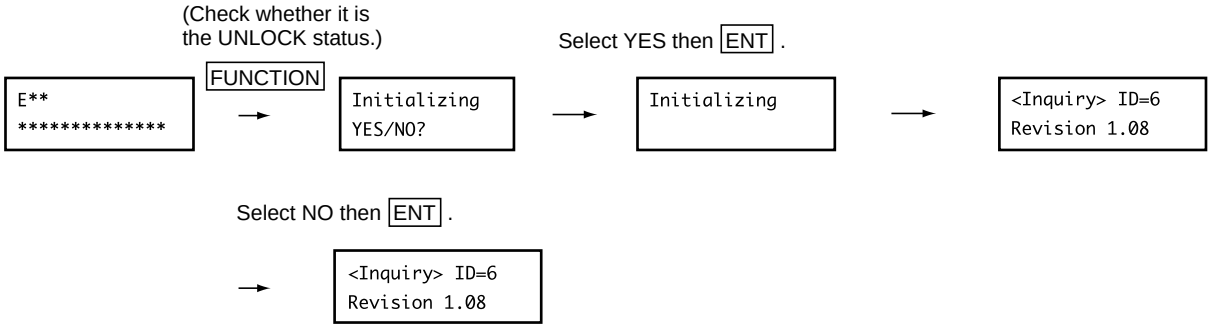

- The requirements and operation procedure when the indication returns from "Initializing" to the previous error indication are the same as those "when an error occurs during mechanism initialization," mentioned above.
- When you specify "Initializing NO," Inquiry submode is selected. Change to Door submode to open the door, and remove the defective drive.

● Hyper-magazine timeover

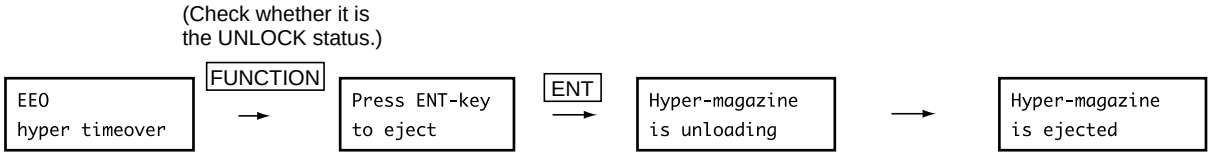

- If memory of a hyper magazine cannot not be read, a warning message is displayed. Error EE0 is generated by a timeout in an inserting/ejecting operation, which has no relationship to memory. In either cases, normal condition may be restored by once ejecting the hyper magazine and then reinserting it.

5. Preparatory Operations after Opening the Door, and Related Cautions

When the door opens, push the FUNCTION key to switch to System Administrator mode and read out and make a note of various kinds of information upon error generation in Config submode and Info submode. It will be useful for future error analysis and management.

- Mount position of magazine (bay number), magazine ID, and magazine type : Read out in Config submode.
- Mount position of drive (bay number), device ID, and drive type : Read out in Config submode.
- Error log : Read out using "Log/Error-log" in Info submode.
- Running time, the number of times of operation : Read out using "Run-statistics" in Info submode.
- Whether the machine recognizes whether there is a disc in the changer : Read out using "Contents" in Info submode.

If the magazine or the drive stands as an obstacle, and the condition of the disc carriage mechanism cannot be visually confirmed, pull out the magazine or the drive as required. However, to make the restoration after error management quick and certain, follow the notes shown below:

- The operation must be done with the power on, as connecting and disconnecting of devices are not recognized when the power is off.
- Make a note of the bay and magazine numbers when you pull out the magazine, and return the magazine to the original position when reconnecting it after error management.
- If a disc remains in the disconnected drive, be sure to take out the disc. If the drive is reconnected to the changer with a disc remaining, the disc is not detected, and this may cause a problem.
- Mechanism Initialization may begin if the door is closed. Be careful not to inadvertently close the door during operations. Blocking the hole to disable the door switch may be effective.
- You can check the operation while observing the internal mechanism with the door open by pressing the door switch. In this case, be careful not to insert anything such as your hands inside, because the carriage base travels at high speed. And do NOT connect/disconnect the magazines and drives in this condition. As such a situation is impossible under normal conditions, doing so may generate inconsistency and cause a secondary problem.
- Do NOT eject the disc from a magazine carelessly. Doing so may cost you unnecessary probing operations after error management.

6. Check Items and Management Procedure for Each Error Code

■ Fatal errors (mainly errors with the mechanism)

Confirmation of the causes and management procedure

● Disc-protruding errors

Error No.	LCD Display	Most Likely Cause	Check Items	Management Procedure
E83	disc set NG	Disc protruding	The disc-protruding sensor becomes active when the door is opened, and the buzzer keeps sounding while trouble persists. Pull out the connected magazines one by one until the buzzer stops. (The hyper magazine is ejected in Hyper submode.)	If ON/OFF of the buzzer coincides with your connecting/disconnecting a magazine, that magazine is the cause. Check whether the disc is tilted or not. The error will be canceled if the buzzer does not sound after inserting the disc again properly and mounting the magazine again.
		Chuck mechanism protruding	If the buzzer keeps sounding even after you remove all the magazines, check whether the carriage base block is in normal condition.	If the chuck or D-guide of the carriage base block is protruding, rotate the pulley on the rear side with your fingers (take care that the belt does not come off) so that the chuck or D-guide returns to its normal position. The error will be canceled if the buzzer turns off.
		Defective sensor	If the buzzer keeps sounding even after the carriage base block returns to the normal position, check that the light sensor is not blocked and nothing is stuck to it.	If you find nothing blocking or stuck to the light sensor block, close the door and try initialization. If the buzzer does not stop, readjustment of the sensor sensitivity is needed.

● Errors in the elevating system

After an error is generated in the elevating system, manual operation (Diag-Robotics-Individually-Elevation-Manual in Test mode) is also forbidden, because there is no guarantee that the address will be recognized normally. However, by setting to this mode, you can monitor the change in address using the display window. When an error is generated, set the unit to this Test mode first.

Error No.	LCD Display	Most Likely Cause	Check Items	Management Procedure
E86	elev. motor FG NG	Rotary encoder trouble	Remove the side panel at the lower right, and check VOA (CN601, pin 6) and VOB (CN601, pin 7) of the MMCB unit.	The carriage base moves up or down as you rotate the pulley or belt of the VD motor. The rotary encoder is defective if the VOA and VOB phase changes do not correspond to the direction and speed of rotation of the motor. Replace the rotary encoder.
E87	elev. sensor	Elevating address sensor trouble	Remove the side panel on the lower right, and check the lighting statuses of the green and red LEDs on the FNCB unit or DCMB1 unit.	The carriage base moves up or down as you rotate the pulley or belt of the VD motor. The LEDs show the VUPS and VDNS logic. If they turn ON/OFF normally, the MMCB unit is defective. Check whether pins 84 and 86 of IC101 are stable.
E88	elev. motor lock	Elevating motor locked	Pull out the magazines, confirm the position of the carriage base, and check that it corresponds to the address recognized by the changer (read out in Test mode). If the position corresponds to the address properly, close the door and try initialization.	If the machine does not work, and E88 is generated again, remove the side panel on the lower right, and check that CN105 of the MMCB unit is not disconnected. VMLOCK at pin 8 of CN105 is Low in normal condition. If VMLOCK remains High when the VD motor is not driven, there is a wire disconnected.
		Elevating address sensor or rotary encoder trouble	If the recognized address does not correspond to the actual position of the carriage base, and the carriage base is located in the highest or lowest position, there may be sensor trouble.	Remove the side panel on the lower right, and check the same items as those for E86 and E87 while moving the carriage base by rotating the pulley or belt of the VD motor.
		Foreign object contamination	If the carriage base is located in the highest or lowest position, something may have gotten caught inbetween. Remove the side panel on the lower right, and try to move the carriage base by rotating the pulley or belt of the VD motor.	Move it slightly in the movable direction, and remove the foreign object, if any is found.
E89	elev. timeover (Normal timeout value is set to 10 seconds.)	Belt off in the elevating drive unit	Press the door switch without closing the door. If the unit does not work, and E89 is generated, remove the right side panel and check the elevating drive unit (timeout value is set to 65 seconds for initialization).	You can see the elevating drive unit by removing the right side panel. Check the transfer system (such as the belt) from the VD motor to the carriage base. Be careful not to touch the carriage base because it travels at high speed.
		Adjustment inaccuracy	If E89 is generated after an elevating initializing operation toward around address 15 is completed, check that the carriage base is not vibrating around address 3 or 15.	Even when the carriage base has reached around the target address in 10 seconds, a timeout is generated and the carriage base vibrates if it cannot accurately find the stop point. Check whether the adjustment of the carriage base is accurate.
		Encoder plate installation error, deformed object adhered, etc.	If E89 is generated in an elevating operation to a particular address when an initializing operation is completed normally, check the current address of the carriage base in Test mode. Also check the lighting statuses of the green and red LEDs on the FNCB unit.	There may be a problem with the encoder slit around the address. Try an elevating operation to the suspected address using "Diag-Robotics-Collectively-Step by step" (Step Operation mode) in Test mode.

● Errors in the loading system

The loading motor can be operated manually (Diag-Robotics-Individually-Loading-Manual in Test mode) only if you cancel the operation restriction by pressing the door switch (turning the relay on). Be sure to switch to Test mode first, because initialization (including the elevating system) is started when the door switch is pressed in any mode other than Test mode. (Initialization is not started by closing the door after switching to Test mode). In addition, be sure to press the door switch with the door open, because operating the motor without observing the change in the mechanism status may cause a secondary problem.

Error No.	LCD Display	Most Likely Cause	Check Items	Management Procedure
E97	loading SW NG	Dislodged or disconnected flexible cables	Check whether the change in the mechanism status corresponds to the logic change of the switches by rotating the pulley on the rear side manually while monitoring the logic of the five loading switches with "Diag-Robotics-Individually-Loading-Manual" in Test mode.	If the logic of the switches does not change, remove the right side panel, and check whether the flexible cable connection from the MMCB unit to the carriage base is normal. If any disconnected cable is found, reconnect it after turning the power off.
		Removal of the switch arm in the carriage base block	If the logic of the switches does not change while connection of the flexible cable is normal, check the switch arm mounted on the bottom of the carriage base block.	If the switch arm is not located at the correct position, it may have dropped somewhere inside. This may cause E88. Find and remount it to the correct position.
E98	loading mecha NG	Grease shortage around steel ball (6)	Check whether the amount of grease around the steel ball (6) is sufficient by raising the outer table of the carriage base block after making note of the current logic of the loading switches with "Diag-Robotics-Individually-Loading-Manual" in Test mode.	Add Froil if grease is insufficient. After that, remove the right side panel and cancel the operation restriction by pressing the door switch, and try manual operation of the loading mechanism.
		Abrasion of parts in the loading mechanism	Check the number of times of operation of expendable parts with "Info-Run statistics-Number of times-Load/Unload" in System Administrator mode.	If the number is more than 4 millions, you may have to replace the carriage base assembly.
E99	loading timeover	Mechanism adjustment inaccuracy	Read out the current logic of the loading switches with "Diag-Robotics-Individually-Loading-Manual" in Test mode, and read out the elevating address with "Diag-Robotics-Individually-Elevation-Manual" in Test mode.	Estimate the position of the carriage base block from the elevating address, and pull out the magazine to the estimated position. If the pulley or D-guide is placed against a position of the magazines such as the edge, check the adjustment of the mechanism operating unit again.
		Dislodged belt	If the loading mechanism does not operate at all when it is located in the correct stop position, there may be trouble in the motor or the transfer system.	Rotate the pulley manually, and check the change in the mechanism status. If the mechanism does not move when the pulley can be rotated, check the drive system (belt).
		Loading motor worn out or experiencing other trouble	Check the number of times of operation with "Info-Run statictics-Number of times-Load/Unload" in System Administrator mode. If the number is more than 2 millions, you may have to replace the motor assembly.	There may be trouble in the motor if it can be operated by hand normally. Cancel the operation restriction by pressing the door switch and test manual operation of the loading mechanism.
		Abrasion of parts in the loading mechanism	Check the number of times of operation of expendable parts with "Info-Run statictics-Number of times-Load/Unload" in System Administrator mode.	If the number is more than 4 millions, you may have to replace the carriage base assembly.
		Demo mode preparation failure	If E99 is generated when you try to carry a disc to a slot where a disc has already been set during Demo mode execution, check that discs are not left in forbidden positions.	In All Slot Aging Demo mode, discs must be set in hyper magazines No. 1 to 4. The other magazines must be vacant.
		Insertion error of the connector of the drive	When carrying a disc to the drive, if the disc touches something while being loaded into the next bay, there may be an error mistake of the changer interface connector of the drive.	Open the rear door and check the connection. The changer interface connectors can be used only for whose exclusive bays connected to the drive. If a disc remains in the drive, once pull out the drive, then reconnect it properly after removing the disc.

Error No.	LCD Display	Most Likely Cause	Check Items	Management Procedure
E9A	MTE sensor NG	Disc detection sensor trouble	Cancel the operation restriction by pressing the door switch, then perform disc loading/unloading operations with "Diag-Robotics-Collectively" in Test mode.	It is normal if an asterisk (*) is displayed properly on the display window. If it is abnormal, perform the adjustments described in Section 6.3. If it cannot be adjusted, check that DSENS is not disconnected.
EF8	MTE mecha NG	Demo mode preparation failure	If the error is generated during Demo mode execution, check that discs of the necessary number have been set to the specified positions.	Discs must be set in hyper magazines No. 1 to 16 in Hyper-Drive Demo mode.
		Mechanism adjustment inaccuracy	Read out the current logic of the loading switches with "Diag-Robotics-Individually-Loading-Manual" in Test mode, and read out the elevating address with "Diag-Robotics-Individually-Elevation-Manual" in Test mode.	Estimate the position of the carriage base block from the elevating address, and pull out the magazine to the estimated position. If it seems that EF8 is generated for a slot with a disc mounted, check the adjustment of the mechanical operation system again.

● Door-not-opening error

This error is generated only when the subsequent operation cannot be continued without opening the door, for example, when the shipping screws are in place, or after error generation. In other cases, the attempt to open the door is abandoned.

Error No.	LCD Display	Most Likely Cause	Check Items	Management Procedure
EF3	door open NG	Something pressing against the door	Check that there is nothing in front of the door to prevent it from opening.	Make sure there is sufficient clearance for the door to open.
		Plunger trouble	Execute DOOR submode in System Administrator mode and check whether the sound of pulling the plunger can be heard.	If there is no sound, check the plunger drive circuit, power source, and plunger.
		Door lock mechanism trouble	If the door does not open when the sound is heard (retried five times), there may be a trouble in the mechanical parts for releasing the door lock (such as rods and springs).	Remove the panels on the left and right side, and check whether the mechanical parts for opening the door lock are mounted correctly.
		Door switch trouble	If you see an error indication while the door is open, check the door switch mounting and the output logic.	Also check the selectors of the serial system, because the door switch logic is read by converting it to serial data.

◎ Nonfatal errors (mainly errors with the drive unit)
Confirmation of the causes and management procedure

● Errors in the drive unit

If an error is generated during initialization after resetting, the message asking you whether to continue initialization or not is displayed. If the display returns to an error message from "Initializing" again when you continue initializing by pressing the ENT key, the problem must be corrected after forcibly opening the door. If the door is opened with a disc remaining in the drive, the information as to where the disc is to be returned will be lost when the changer interface connector of the drive is disconnected. So the disc must be removed from the drive before reinstalling the drive (or reconnecting the interface connector). Pay special attention if the connection of the interface connector is loosened or it is reconnected.

Error No.	LCD Display	Most Likely Cause	Check Items	Management Procedure
EA*	D# connect NG	Strap terminal connector (DR-R7181) disconnected	Following "7.1.4 DISASSEMBLY", open the rear door, check that check that the strap terminal of the drive mounted on the drive bay (Bay 1 to Bay 16) having the corresponding number to the suffix (0 to F) of the error code is firmly connected.	If the strap terminal disconnected or loose, reconnect it. If the strap terminal is normal, disconnect the drive and pull it out. When you close the door, initializing begins.
EB*	D# setup NG	Strap terminal connector (DR-R7181) disconnected		
EC*	D# stop NG	Strap terminal connector (DR-R7181) disconnected		
ED*	D# clamper NG	Motor or drive-circuit trouble	Check whether the clamper of the drive where the error was generated can be manually operated with "Diag-Robotics-Individually-Clamper-Manual" in Test mode.	If it cannot be manually operated, perform the same check with the other clampers. If no clamper operates, remove the right side panel, and check the connection of the DIFB unit.
		Switch trouble	If switching is not accomplished even though the switch is operable, check the switch and the read-in circuit of the switch.	If the connection is normal, also check the selector circuit.

● Nonfatal errors with blocks other than the drive system

If an error is generated during initialization after resetting, a message asking you whether to continue initializing or not is displayed.
The system switches to User mode if there is no problem other than in the device when you continue initializing by pressing the ENT key.
The devices that have problems cannot be used.

Error No.	LCD Display	Most Likely Cause	Check Items	Management Procedure
EE0	hyper timeover	Motor or drive-circuit trouble	Check that the motor can be manually operated with "Diag-Robotics-Individually-Hyper Mag-Manual" in Test mode.	If switching is not accomplished even though the switch is operable, check the switch and the read-in circuit of the switch.
		Dislodged or disconnected connector assembly	If no operation is possible, also check the operation status of the mailslot which shares the HMIF unit using "Diag-Robotics-Individually-Mailslot-Manual."	If the mailslot is also inoperable, remove the right side panel and check the connection to the HMIF unit. If the connection is normal, also check the selector circuit.
EE1	f-unit timeover	Motor or drive-circuit trouble	Check that the motor can be manually operated with "Diag-Robotics-Individually-Flip unit-Manual" in Test mode.	If switching is not accomplished even though the switch is operable, check the switch and the read-in circuit of the switch.
		Dislodged or disconnected connector assembly	If operation is not possible, also check that the operation status of the clamper with "Diag-Robotics-Individually-Clamper-Manual."	If the clamper is also inoperable, remove the right side panel and check the connection of the DIFB unit. If the connection is normal, also check the selector circuit.

Error No.	LCD Display	Most Likely Cause	Check Items	Management Procedure
EF9	mail timeover	Motor or drive-circuit trouble	Check that the motor can be manually operated with "Diag-Robotics-Individually-Mailslot-Manual" in Test mode.	If switching is not accomplished even though the switch is operable, check the switch and the read-in circuit of the switch.
		Dislodged or disconnected connector assembly	If no operation is possible, also check the operation status of the hyper magazine which shares the HMIF unit using "Diag-Robotics-Individually-Hyper Mag.-Manual."	If the hyper magazine is also inoperable, remove the right side panel and check the connection to the HMIF unit. If the connection is normal, also check the selector circuit.
EF1	eeprom memory NG	Memory trouble	The data which may cause and error in operation are erased automatically. When mechanism initialization is completed, check "Contents" in Info submode of System Administrator mode.	If all the disc detection information is Uncertain, perform probing again in Probe submode.
			Check "Error-log" in Info submode.	If there is an undefined error code, hold the FUNCTION key and ESC key simultaneously pressed for 4 seconds. After that, press the ENT key following the displayed instructions to clear the error log.
			Check the number of times of operation and the running time in Info submode.	If there is an abnormal value, hold the FUNCTION key and ESC key simultaneously pressed for 4 seconds. After that, press the ENT key following the displayed instructions to reset the data.
			If mechanism initialization cannot be completed and an error such as EF8 is generated, execute "All erase" of memory.	Moves the cursor to "Info" on the first screen of the Test mode, FUNCTION and ESC keys simultaneously pressed for 4 seconds. After that, press the ENT key following the displayed instructions to restore the momory. After restored, perform probing again.
EF2	address missing	Adjustment inaccuracy	Check the adjustments of the mechanical operation system and elevating speed following the descriptions in 6.2 on pages 127 to 130 and 6.5 on page 131.	When the LEDs are lit, there may be trouble in the position sensor switch for the mail slot tray. Check the logic of SNS0, SNS1, and SNS2.
EF9 EFA	mail sensor NG	Tray-position sensor switch trouble	Check that the "MAILSLOT OCCUPIED" indication by LEDs is not lit when the mail slot is open.	When the LEDs are lit, there may be trouble in the position sensor switch for the mail slot tray. Check the logic of SNS0, SNS1, and SNS2.
		Disc-sensor switch trouble	Check that the "MAILSLOT OCCUPIED" indication by LEDs is off when you close the mail slot without setting a disc.	When the LEDs are lit, and go dark when you open the mail slot, there may be trouble in the disc sensor. Check the logic of SNS2.

● Troubles not handled as errors (warning messages)

These are miner problems detected upon resetting that do not affect initialization of other mechanisms.

Warning Message	Check Items
Fan* stop or locked	Check the standard fan (Fan 1) and the additional fan (Fan 2).
Fan* connect NG	Check the connection of the standard fan.
hyper eject and insert	Check whether eject/insert can be made in Hyper submode of System mode and the touch memory can be read after an insert operation.

7.1.3 DISASSEMBLY

■ Side Panel

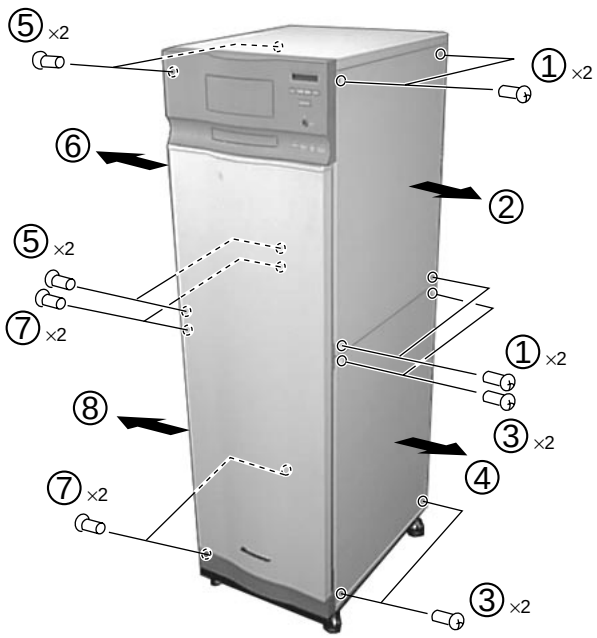

②, ④, ⑥, ⑧

Remove each slide panel after sliding to the sideways.

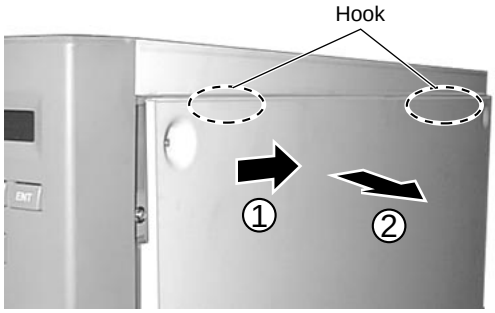

■ Fornt Door

● Opening the Front Door Manually (1)

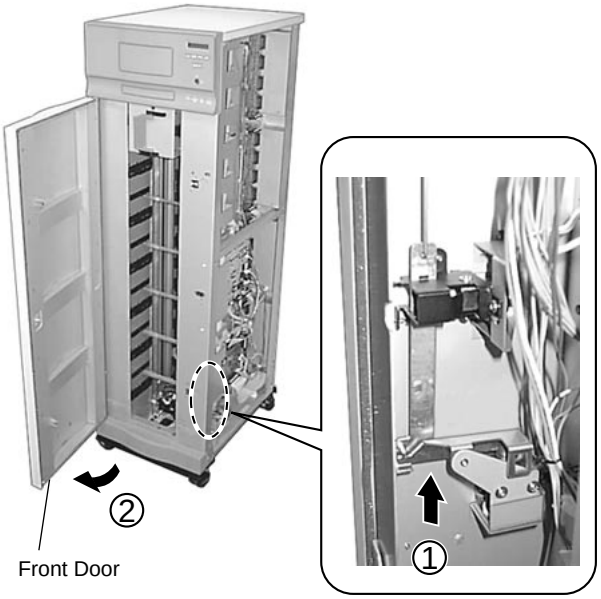

● Opening the Front Door Manually (2)

Insert a thin plate, such as a square, through the gap between the Front Door and the body, horizontally about 30 mm, and move the thin plate upward until it reaches and unlatches the Plate Stopper. Then the Front Door can be opened manually.

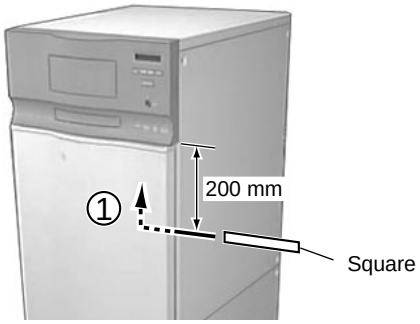

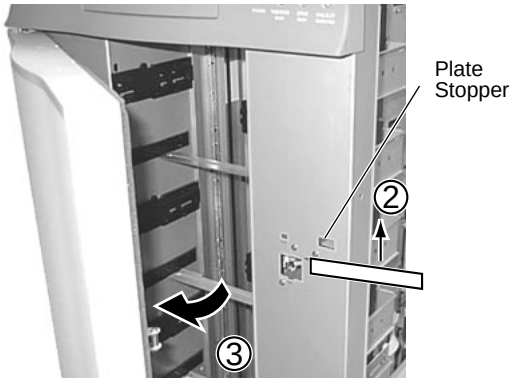

■ Rear Door

① To manually open the Rear Door, insert a thin rod, such as a small-diameter screwdriver, diagonally down approx. 50 mm through the hole at the lower side of the rear door.

② Press it down as shown in the illustration. Then the Rear Door can be manually opened.

③

Rear Door

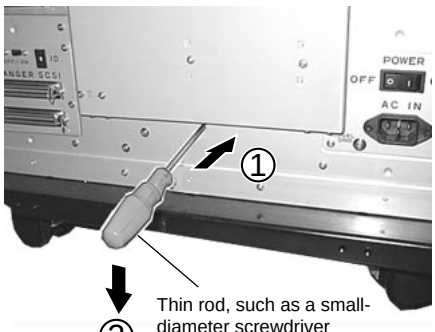

■ Reader Drive Unit

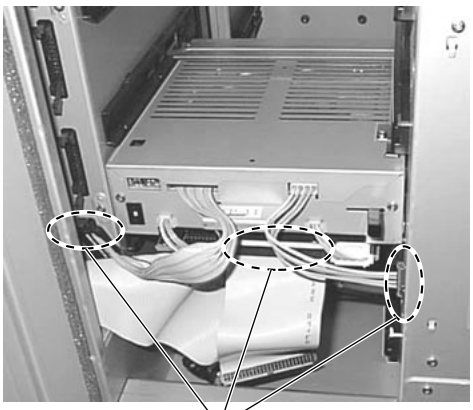

① ×3

Remove three connectors.

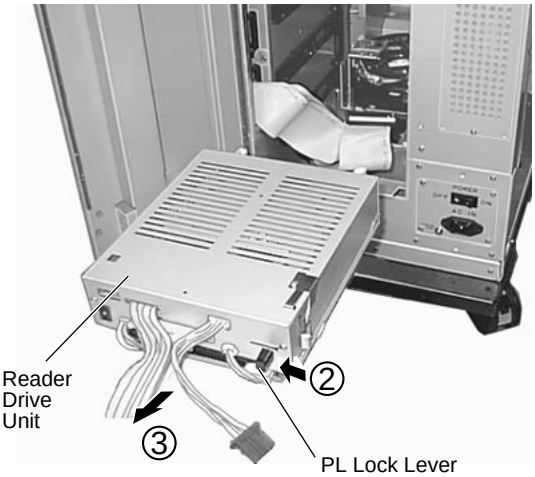

• The reader drive can be installed in any slot. (You can install as many optional reader drives as there are slots available.)

● Removing the PL Upper Cover of the Drive Unit

The PL Upper Cover is fixed with Claws at the front and with screws at the rear. To remove the PL Upper Cover, proceed as follows. Failure to do so may damage the claws.

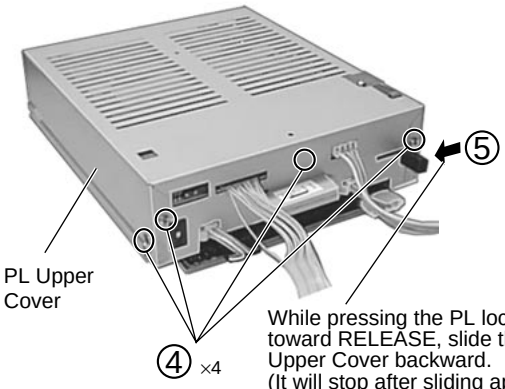

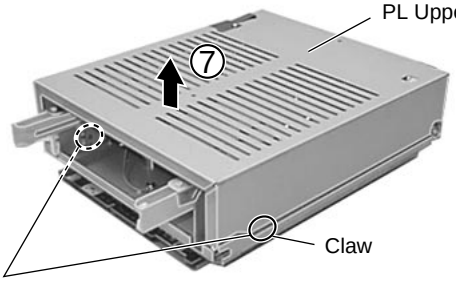

⑥ Press and bend the front part of the PL Upper Cover from the left and right sides to unhook the claws, then lift up the cover. (Do NOT try to lift up the cover forcibly with the claws unhooked. This may damage the claws and make it impossible to reattach the cover.)

• When reattaching the cover, reverse the above procedures. (Place the cover approx. 1 cm backward and hook the claws, then slide the cover forward.)
• Observe the driver unit from the rear to check that the claws are firmly engaged.

■ How to Install the Additional Power Supply Unit (DRW-PW701)

① Remove the lower left side panel. (four screws)

② Hang up the Additional Power Supply Unit to hooking screws and tighten the four screws (BBZ30P060FMC).

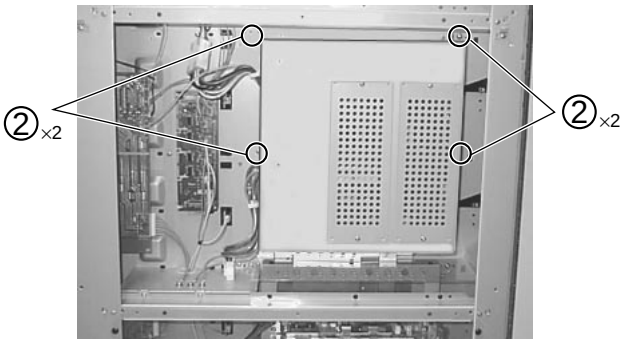

③ Connect a connector. (for DC output)

④ Insert a connector. (for power supply of Fan Motor)

⑤ Connect a connector. (for AC input)

⑥ Tighten the two screws (accessory parts, PMB40P080FMC) to fix the earth lead wire and the chassis.

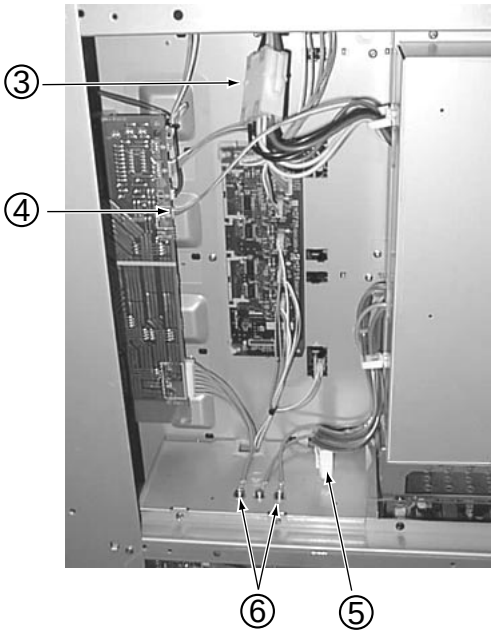

⑦ Install the lower left side panel. (four screws)

■ Moving the Carriage Base Up and Down Manually

1. Open the Front Door.
2. Remove the Side Panel, located at lower-right viewed from the front.
3. Rotate the Pulley with your fingers clockwise to move the Carriage Base downward, and counterclockwise to move it upward.

Caution: If the Front Door Switch is set to ON while the power is on, the Motor Shaft will start rotating.

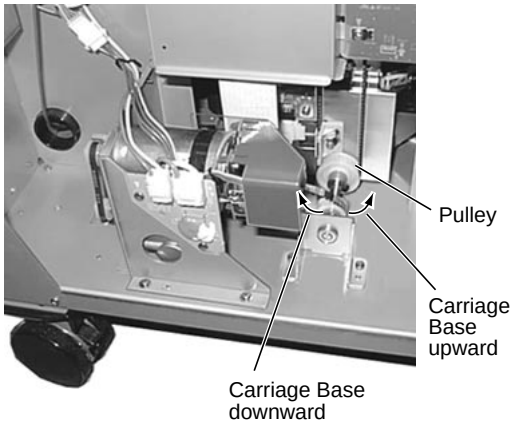

● For Shipping Stopper Screw of the Carriage Base

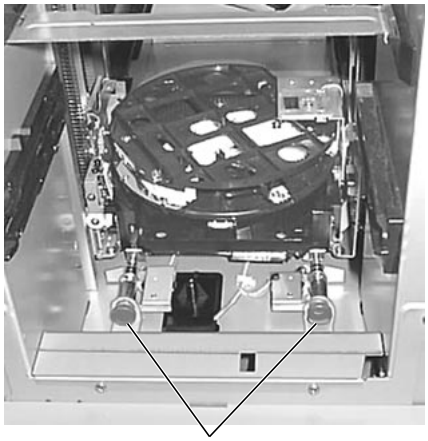

For safety, when moving the unit, fix the Carriage Base by the shipping stopper screws.

■ Removing the VD Motor Fixing Plate

① Remove the side panel, located at lower-right viewed from the front.

② Remove the four screws (ABZ30P060FMC).

③ Remove the spring, belt and two connectors.

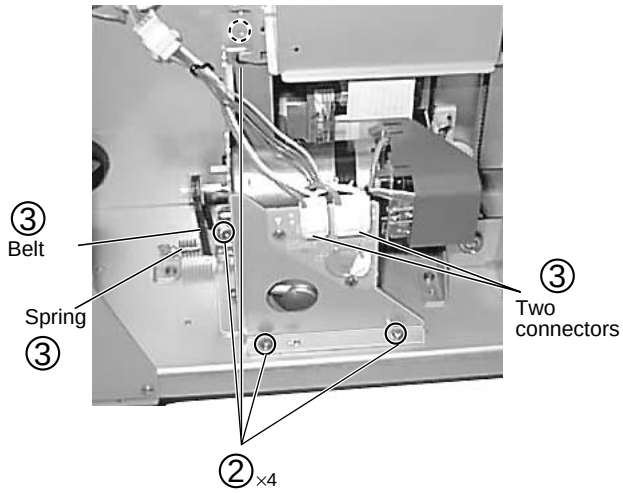

■ Removing the Carriage Base

① Open the Front and Rear Doors. Turn off the power.

② Move the Carriage Base Assy down until it touches the under chassis by manually rotating the shaft of the elevator motor.
Caution: If the Carriage Base Assy does not touch the under chassis, the table of the Carriage Base Assy will be deformed.

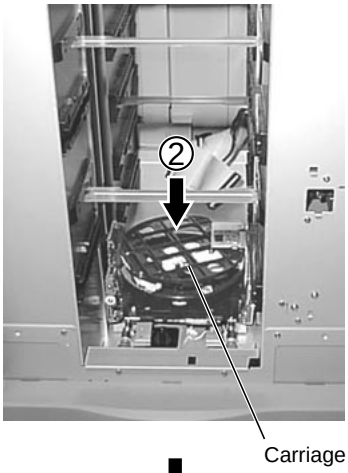

③ Remove the four screws (PMB30P060FMC) and remove the Carriage Base.

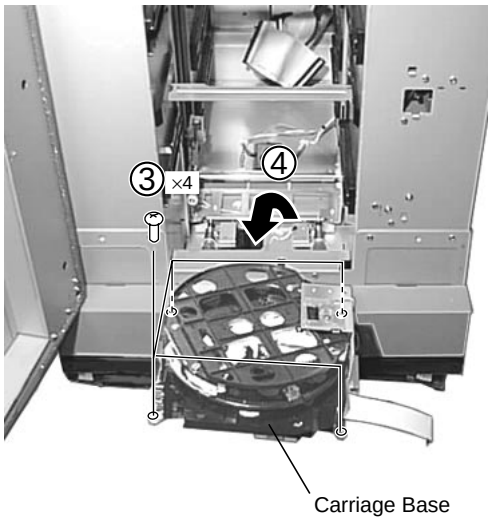

●Reattaching the Carriage Base

1. Reattach the Carriage Base with the four screws with the table of the Carriage Base Assy touching the under chassis.

Caution: Be sure to proceed with this step with the Carriage Base Assy touching the under chassis. Otherwise, the table of the Carriage Base Assembly will be deformed.

●Entering Adjustment Mode

1. Locate the Carriage Aase Assy at an address between 200 and 250.
2. Proceed the each adjustment.

■ Maintenance of the Carriage Base

(1) Removing the Chuck Assy

1. Move the Carriage Base.
2. Turn off the power.
3. Slide the Chuck toward you by rotating the Loading Motor.
4. Lifting up the Upper Plate, pull the Chuck Assy from the shaft of the Planetary Arm.

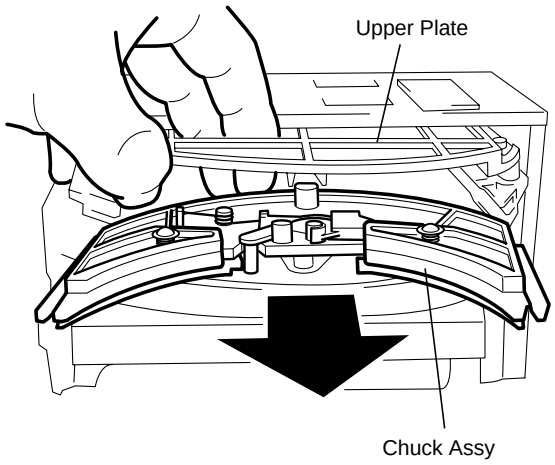

Fig. 1

(2) Removing the Swing-full Assy

1. Remove the Carriage Base Assy .
2. Remove two fixing screws ① and remove the Sensor Stay.

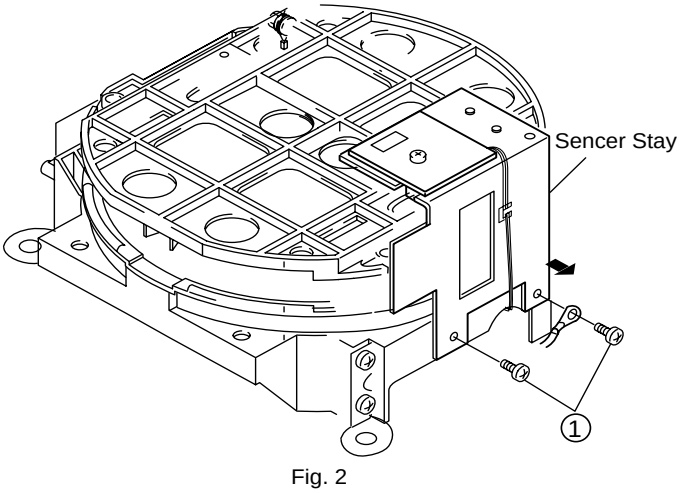

Fig. 2

Note : Make sure not to damage the wire. Also, be sure to remember the layout of the wire before removing.

4. Unlock the Lock Plate by sliding the plate with its side lifted.

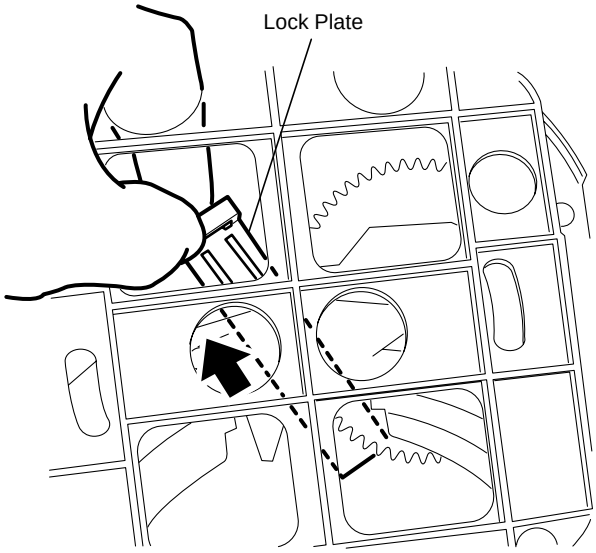

Fig. 3

5. Grip the Chuck Assy and the Upper Plate together so that the Chuck Assy will not move, and pull them out toward you.

Note : Pull out the Chuck Assy and the Upper Plate slowly straight toward you so that the Steel Ball will not fall. After pulling them out, remove the Steel Ball.

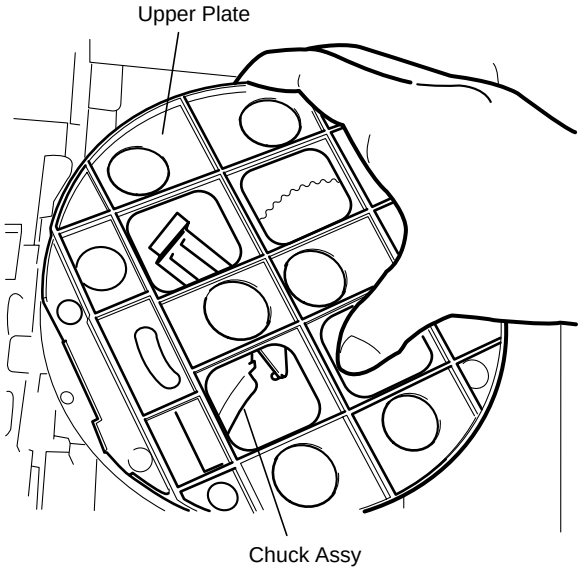

Fig. 4

(3) Attaching the Inner Table Assy

1. Mount the Inner Table Assy so that the tip of the Planetary Arm Assy is centered on the cutout of the Outer Table.

Note : Make sure that the Inner Table Assy is not mounted on the flange of the Outer Table.

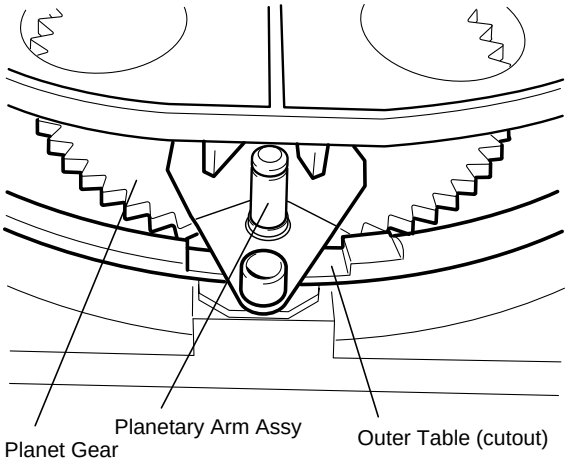

Fig. 5

(4) Mounting the Swing-full Assy

1. Place the unit in the upright position with the left side of the unit up (right side down). Use a soft cloth such as a rug to protect the Front Door.
2. Align the largest, key-shaped axis of the H Cam Gear of the Carriage Base and two SW Arms C with the ▲ marks.
3. Turn the Inner Table of the Swing-full Assy completely counterclockwise and keep it in that position.

Note : Grip the Chuck Assy and the Upper Plate firmly so that the Inner Table will not return to its original position under its spring tension.

4. Insert the Steel Ball into the slot of the Outer table.
5. Align the key-shaped slot of the Inner table with the key-shaped axis of the H Cam Gear, and mount the Swing-full Assy.

Note : While mounting the Inner Table, press it on so that the Inner Table will not pop up from the Outer Table .

6. Slide the Lock Plate, and lock it.

Note : Check that the Lock Plate is firmly locked by lifting the Swing-full Assy.

7. Rotate the Swing-full Assy one turn by rotating the Loading Motor. If the SW C Arms are not seated in the cam grooves, the rotation will be locked midway. In such a case, remove the Swing-full Assy and repeat steps 5 through 7.
8. Lay out the wire of the Sensor Stay and screw on the Sensor Stay.

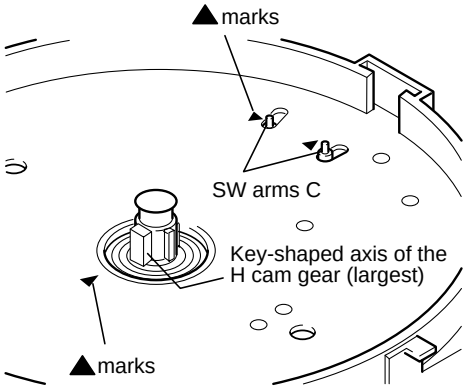

Fig. 6

(5) Attaching the SW Arms

1. Attach the SW Arms as indicated in Fig. 7.

Note : There are three SW Arms, labeled A, B and C.

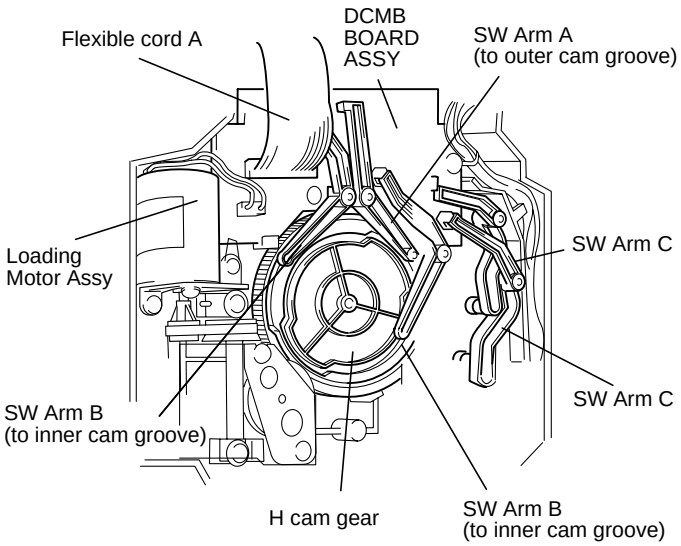

Fig. 7

7.1.4 PCB LOCATION

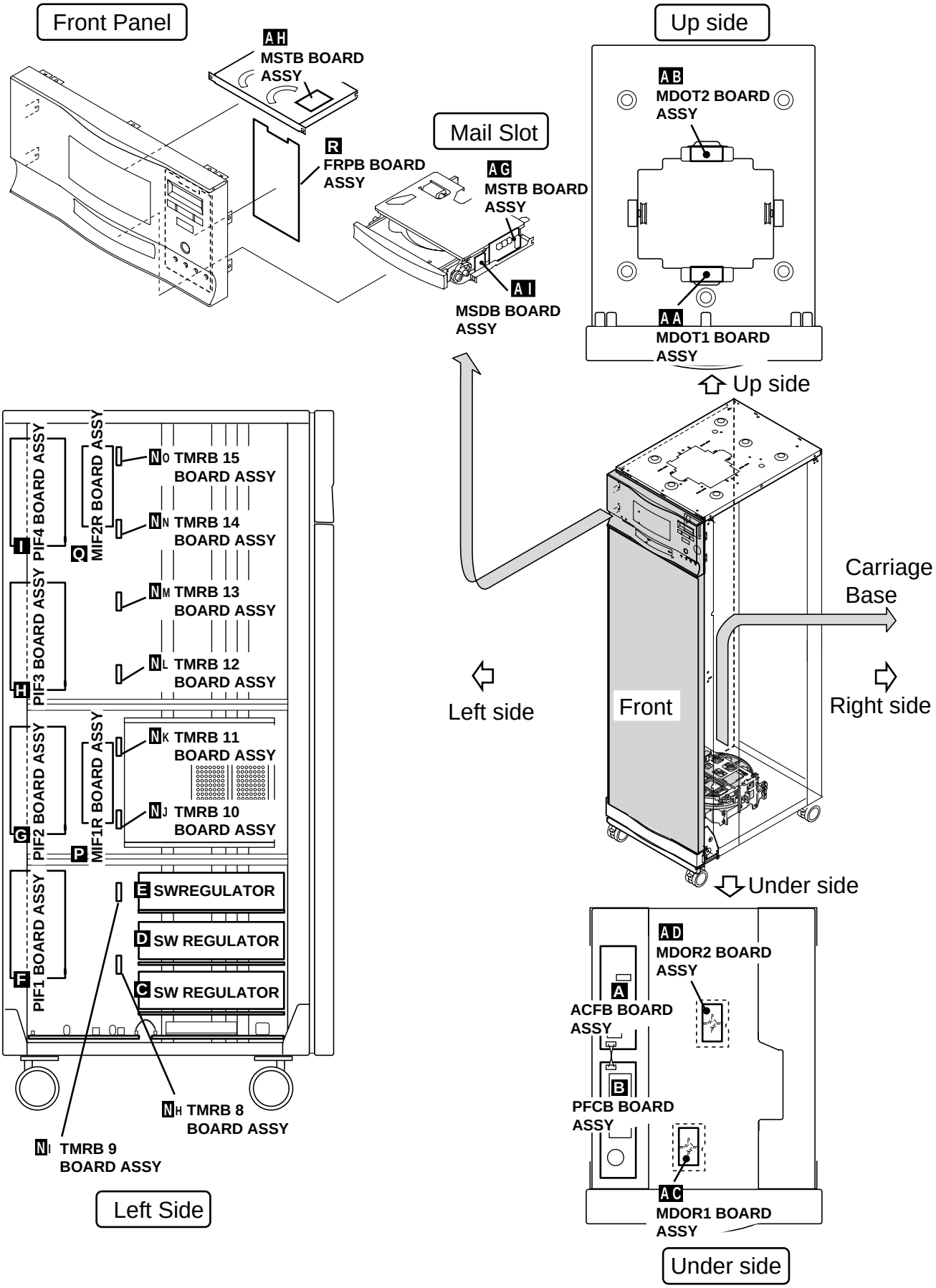

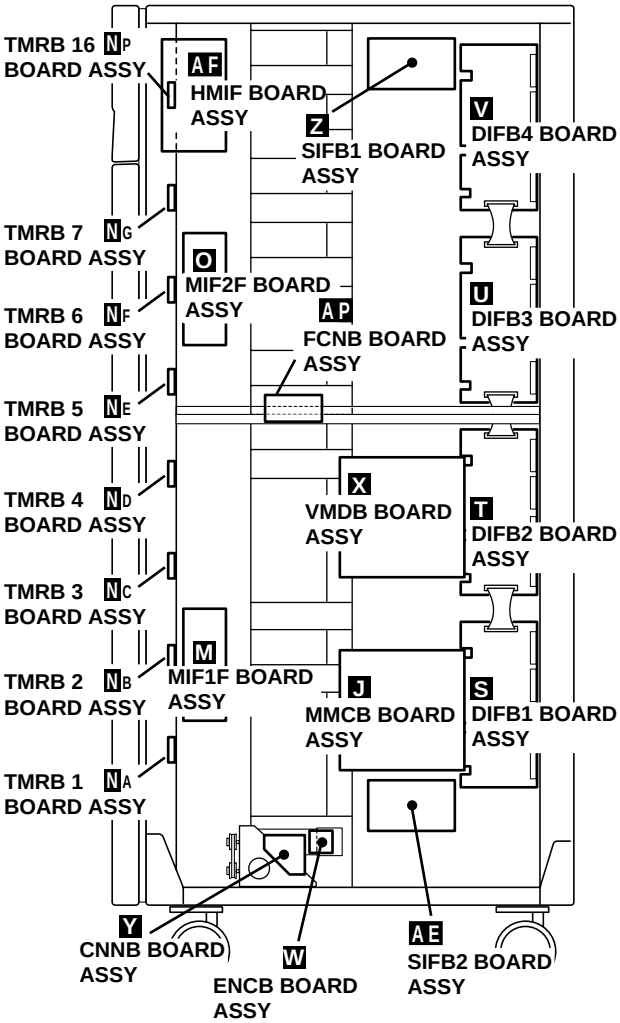
TMRB 16 BOARD ASSY NP
HMIF BOARD ASSY AF
SIFB1 BOARD ASSY Z
DIFB4 BOARD ASSY V
TMRB 7 BOARD ASSY NG
MIF2F BOARD ASSY O
TMRB 6 BOARD ASSY NF
FCNB BOARD ASSY AP
DIFB3 BOARD ASSY U
TMRB 5 BOARD ASSY NE
VMDB BOARD ASSY X
DIFB2 BOARD ASSY T
TMRB 4 BOARD ASSY ND
TMRB 3 BOARD ASSY NC
MIF1F BOARD ASSY M
TMRB 2 BOARD ASSY NB
MMCB BOARD ASSY J
DIFB1 BOARD ASSY S
TMRB 1 BOARD ASSY NA
CNNB BOARD ASSY Y
ENCB BOARD ASSY W
SIFB2 BOARD ASSY AE

Right side

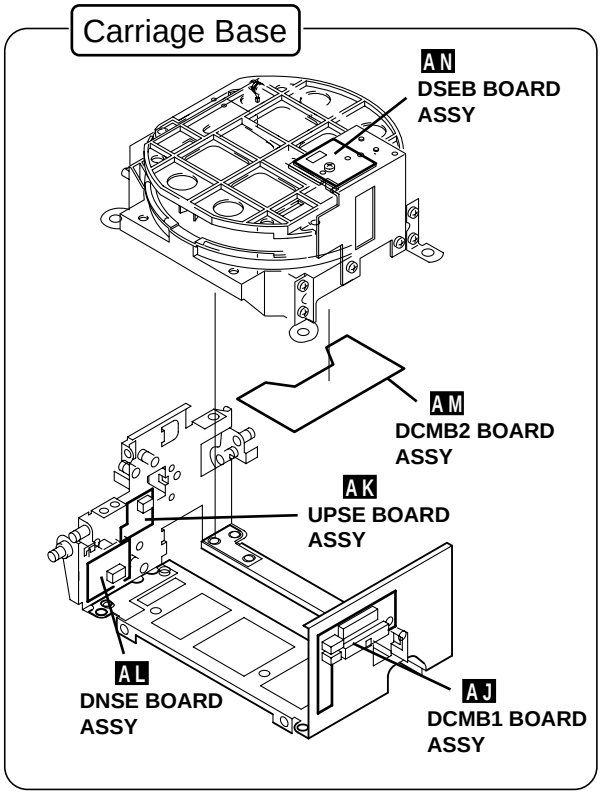
Carriage Base
DSEB BOARD ASSY AN
DCMB2 BOARD ASSY AM
UPSE BOARD ASSY AK
DNSE BOARD ASSY AL
DCMB1 BOARD ASSY AJ

7.2 PARTS

7.2.1 IC

• The information shown in the list is basic information and may not correspond exactly to that shown in the schematic diagrams.

■ HD6415108F10 (MMCB BOARD ASSY : IC101)

• System Control IC

● Pin Function

No.	Mark	Pin Name	I/O	Pin Function	
1	XRES	XRST	I	Reset signal input from the reset IC (IC106) H: Release reset	
2	XINT	XINT	I	Detection signal of +5V power supply voltage decreases from the PFCB Non-maskable interruption	
3	VSS		I	Ground (GNDD)	
4	D0/P10	SW0	I	Rotation angle detection switch of the loading mechanism 0	
5	D1/P11	SW1	I	Rotation angle detection switch of the loading mechanism 1	
6	D2/P12	SW2	I	Rotation angle detection switch of the loading mechanism 2	
7	D3/P13	SW3	I	Rotation angle detection switch of the loading mechanism 3	
8	D4/P14	SW4	I	Rotation angle detection switch of the loading mechanism 4	
9	D5/P15	HMC0	O	CCW (counterclockwise) direction drive output of the loading mechanism	
10	D6/P16	HMC1	O	CW (clockwise) direction drive output of the loading mechanism	
11	D7/P17	LEDB+	O	Reflection sensor LEDON signal for disc presence detection	
12	D8		I/O	8-bit data bus bit 0	Flash ROM (IC102), SRAM (IC103) and SPC (IC133) are common used. Use A19 and A23 for selecting the device. (A23, A19) = (0, 0) ... Flash ROM (A23, A19) = (0, 1) ... SRAM (A23, A19) = (1, 0) ... SPC (A23, A19) = (1, 1) ... for future
13	D9			8-bit data bus bit 1	
14	D10			8-bit data bus bit 2	
15	D11			8-bit data bus bit 3	
16	D12			8-bit data bus bit 4	
17	D13			8-bit data bus bit 5	
18	D14			8-bit data bus bit 6	
19	D15			8-bit data bus bit 7	
20	VSS		I	Ground (GNDD)	
21	A0		O	Address bus (LSB)	SRAM connects until A14, 32kB becomes 080000h to 087FFFh. SPC connects until A3, so specifiable register number is 16. Access with 800000h to 80000Fh. Flash ROM is used for 8-bit mode, so connect A0 to A-1 of the device and connect A1 to A0 of the device. This ROM is 2M-bit (256kB), so connect until A17. 000000h to 03FFFFh is effective. However, more than 020000h is a domain for the upgrade code.
22	A1			Address bus	
23	A2				
24	A3				
25	A4				
26	A5				
27	A6				
28	A7				
29	A8				
30	A9				
31	A10				
32	A11				
33	A12				
34	A13				
35	A14				
36	A15				
37	VSS		I	Ground (GNDD)	
38	A16/P20		O	Address bus	
39	A17/P21				
40	A18/P22				Be carefull not to full decode. A19 and A23 are effective only.
41	A19/P23				
42	A20/P24				
43	A21/P25				
44	A22/P26				
45	A23/P27				

No.	Mark	Pin Name	I/O	Pin Function	
46	VSS		I	Ground (GNDD)	
47	P30/XWAIT	SEL0	O	Serial device selector 0	Selector for time division control to LCD, KEY, EEPROM, SENSOR, ID_SW, DOOR_SW and PLUNGER, etc.
48	P31/XBACK	SEL1		Serial device selector 1	
49	P32/XBREQ	SEL2		Serial device selector 2	
50	P33	(BANK)	O		
51	P34	XCS	O	Common chip select	Common control pins for each serial input/output device.
52	P35	CLK	O	Common clock	
53	P36	SO	O	Common serial output	
54	P37	SI	I	Common serial input	
55	VCC		I	Power supply (V+5D)	
56	P40	OE	O	Control at reset for plunger and LCD are not malfunctioned	
57	P41	XSHIP	I	Tighten sensor input of shipping screw AND of two sensors at right and left.	
58	P42	VMLCK	I	Detection sensor of the elevating motor lock H for over-current. E88 detection is caused.	
59	P43	VMPWM	O	Specify signal output of elevating operation speed control PWM	
60	P44/FTI1	VOB	I	Rotary encoder B-phase input of elevating motor	
61	P45/FTCI1	VOA	I	Rotary encoder A-phase input of elevating motor	
62	P46/FTI2	XUP	O	Indication signal output of elevating operation direction L: upper direction	
63	P47/FTCI2	SBRK	O	Indication signal output of elevating operation stop L: release	
64	VSS		I	Ground (GNDD)	
65	P50/FTOA1	DSEL0	O	Device selector 0	Connect to the 3-to-8 line decoder (74HC138) on the connection unit and select the device.
66	P51/FTOB1	DSEL1		Device selector 1	
67	P52/FTOA2	DSEL2		Device selector 2	
68	P53/FTOB2	DSEL3		Device selector 3	3-to-8 line decoder (74HC138) on the MMCB BOARD Assy which is selected one of seven systems of XDSLA to XDSLG.
69	P54	DSEL4		Device selector 4	
70	P55	DSEL5		Device selector 5	
71	P56	MC0	O	Motor control output 0	Drive the motor (Hyper, Clamp and Mailslot) which is selected by the selector.
72	P57	MC1		Motor control output 1	
73	P60	SNS0	I	Sense 0	Level sense input
74	P61	SNS1		Sense 1	
75	P62	SNS2		Sense 2	
76	P63	LCDE	O	LCD register enable	Output for LCD control
77	P64	XCLP	O	Inform the end of clamp operation to the drive. XCLMPE, XCLMP	
78	P65	XSST	I	Low at spindle stopped XSPST	
79	P66	XLCH	O	Latch signal for keeping the value of XCLP, etc. after the device change	
80	P67	LCDRS	O	LCD register strobe	Output for LCD control
81	VSS		I	Ground (GNDD)	
82	AVSS		I	Ground (GNDD)	
83	AN0	VDNS	I	Lower sensor of vertical position detection Stop position: H	
84	AN1	VUPS	I	Upper sensor of vertical position detection Stop position: L	
85	AN2	VABS	I	Vertical reference position detecting sensor H: upper than address 14.5	
86	AN3	DSNS	I	Reflection disc sensor on the loading mechanism Disc exist: H	
87	AVCC		I	Power supply (V+5D)	
88	VCC		I	Power supply (V+5D)	
89	P80/XIRQ0	XSWAP	O	Control for wiring monitor LED of the drive L: OFF	
90	P81/XIRQ1	XASCINT	I	Interrupt from the SCSI controller (SPC)	
91	P82/SCK1/ XIRQ2	CHECKER	I	Reset for low, then it becomes for function checker mode only.	
92	P83/SCK2 /XIRQ3	RYXBY	I	Monitor the ready busy signal of the Flash ROM	

No.	Mark	Pin Name	I/O	Pin Function	
93	P84/RXD1	DRX	I	RS-232C input	Two characters mnemonic with the built-in drive for protocol
94	P85/TXD1	DTX	O	RS-232C output	
95	P86/RXD2	MRX	I	RS-232C input	Single line serial with the built-in drive for protocol
96	P87/TXD2	MTX	O	RS-232C output	
97	VSS		I	Ground (GNDD)	
98	EXTAL		I	Clock input Connect a 19.6608MHz crystal.	
99	XTAL				
100	VSS		I	Ground (GNDD)	
101	?		O	System clock Outputs 9.33MHz, but don't use for external.	
102	E		O	Enable clock Don't use for external.	
103	XAS		O		DRAM is not used. Use for 8-bit data bus mode, so XRFSH (Reflesh cycle), XAS (address strobe) and XLWR (write at low side) are not used.
104	XRD	XRD	O	Data read	
105	XHWR	XWR	O	Data write	
106	XLWR		O		
107	XRFSH		O		
108	VCC		I	Power supply (V+5D)	
109	(MD0)		I	Power supply (V+5D)	Use for mode 3 (8-bit bus, expansion maximum mode)
110	(MD1)		I	Power supply (V+5D)	
111	(MD2)		I	Ground (GNDD)	
112	(XSTBY)		I	Hardware standby mode is not used.	

8. PANEL FACILITIES AND SPECIFICATIONS

8.1 700 disc changer [DRM-7000]

■ FRONT PANEL

[Front]

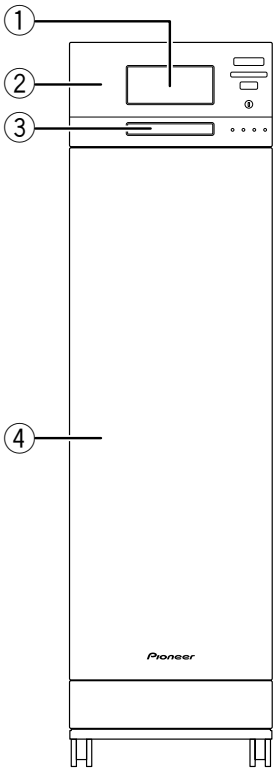

<Control panel>

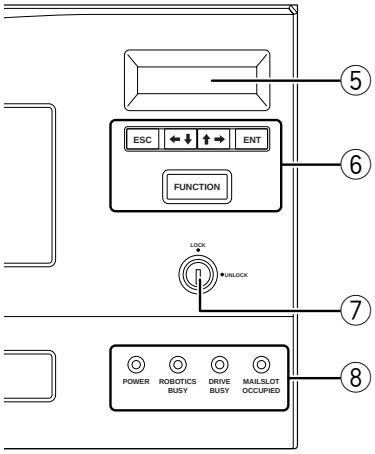

[Front access door INSIDE]

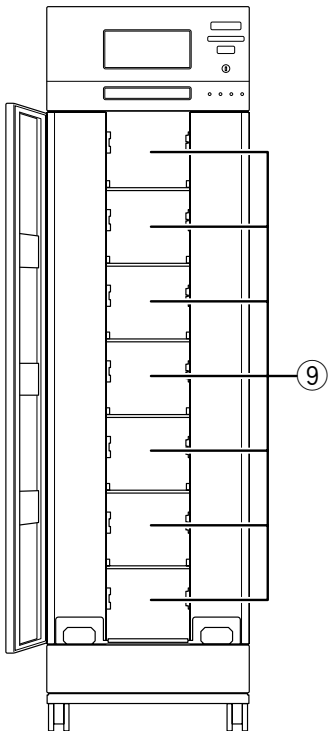

① **20-disc hyper magazine**

② **Control panel**

③ **Mailslot**

④ **Front access door**

⑤ **LCD message window**

The backlight to the LCD message window is designed to automatically go into energy saving mode whenever more than 1 minute passes without any operations being performed from the control panel.

⑥ **Operation keys**

These keys are used to change the display items on the LCD message window and to select setting fields or values. Note that a lock release key is required in order to become effective these keys.

Escape key (ESC):

The escape key is used to step back from the message layer currently being displayed (i.e., to return to the previous display) or to halt operations.

⬅⬇:

This key is used to decrement displayed values or to move the display cursor down or to the left.

⬆➡:

This key is used to increment displayed values or to move the display cursor up or to the right.

Enter key (ENT):

The enter key is used to step forward from the message layer currently being displayed or to initiate a specified operation.

Function key (FUNCTION):

The function key must be pressed in order to enter the system administrator mode.

⑦ **Lock/Unlock key switch**

Inserting a lock release key into this switch and rotating it 90 degrees releases the operation lock and makes it possible to perform operations from the control panel.

⑧ **Status indicators**

POWER:

This indicator lights up whenever the power is on.

ROBOTICS BUSY:

This indicator lights up whenever a disc transport mechanism is in operation.

DRIVE BUSY:

This indicator lights up whenever one or more discs are being placed on each drives.

MAILSLOT OCCUPIED:

REAR PANEL

[Rear]

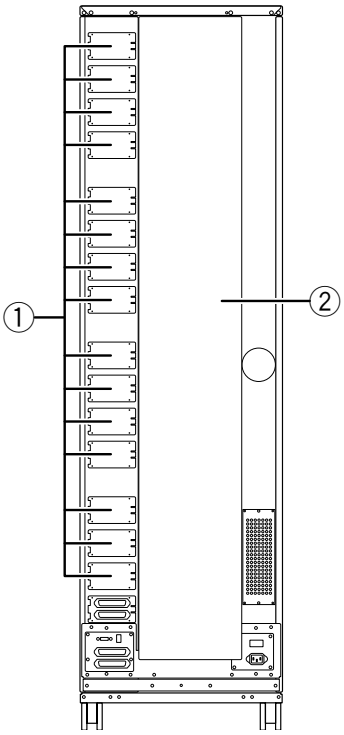

[Rear access door INSIDE]

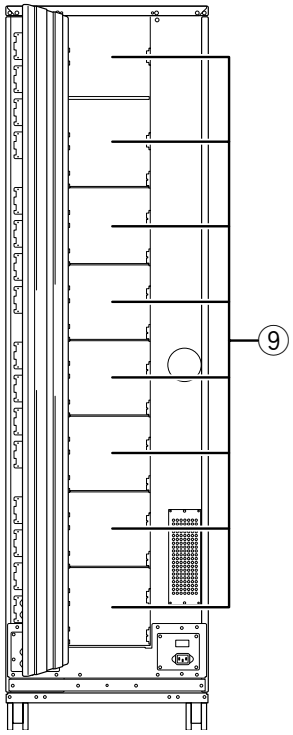

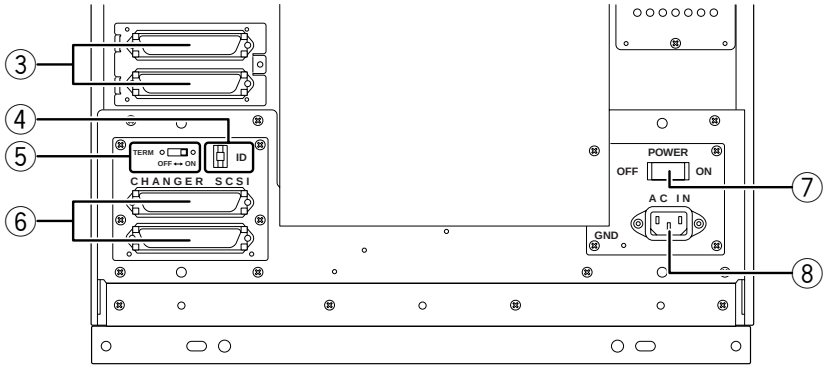

① **Rear plates**
These plates cover the space for attaching the connector panels.

② **Rear access door**

③ **Drive SCSI ports (attached connector panel)**

④ **SCSI ID switch (ID)**
This switch is used to assign the changer SCSI ID. If you would like to decrement the displayed SCSI ID, push the small switch just above the numeric display by a nib. And if you would like to increment, push the small switch just below the numeric display. Note that SCSI ID is set to '6' at the time of shipment.

⑤ **SCSI termination switch (TERM)**
This switch is for SCSI termination. Note that this switch is set ON at the time of shipment and it must be kept ON during the changer installation. But when the SCSI bus connection is completed and the changer is not the last device on the SCSI bus, it must be set OFF certainly.

⑥ **Changer SCSI ports (CHANGER SCSI)**

⑦ **Power switch (POWER)**
This switch is used to turn the power to the changer on and off.

⑧ **Power inlet (AC IN)**
The power cord is inserted into this power inlet. (Note that you should always be sure to use only the power cord provided with your changer.)

⑨ **Rear bays**
The rear bays are designed as the multipurpose bays. For the 50-disc magazines, these bays are similar to the front magazine bays and they are assigned M8-M15. But the rear bays are some

SPECIFICATIONS

Description ..... 700 disc changer
Power supply ..... AC 100V-240V, 50/60 Hz
Power consumption ..... Maximum of 5.5A (500 W)
Weight of main unit (including placement fixtures) .... 91.7 kg
External dimensions (including placement fixtures)
..... 760 x 795 x 1520 mm (W x D x H)
Operating requirements ..... +5°C to +35°C
Humidity ..... 5% to 85% (with no condensation)
Storage requirements ..... –40°C to +60°C

Functional specifications

Maximum number of discs ..... 720 (12-cm discs)
Maximum number of disc magazines
50-disc magazines 14
20-disc hyper magazine 1
Maximum number of drives 16

Items included

20-disc hyper magazine 1
Changer/drive SCSI cable 1
Power cord (for use in Canada and USA) 1
Power cord (for use in Japan) 1
Placement fixtures ..... 1 set
Screw for use in attaching placement fixtures 12
Lock release key 2
Operations Instructions 1
Warranty 1
Service network sheet 1
20-disc hyper magazine dust cover 1

● *The external design of this product or any of the above specifications may be changed at any time without prior notification.*

SCSI connector specifications

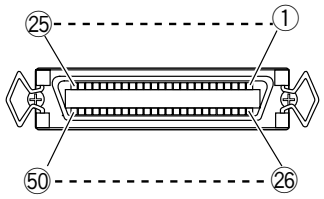

1) Pin layout of SCSI connectors

Signal name	Pin No.		Signal name
GROUND	1	26	-DB(0)
GROUND	2	27	-DB(1)
GROUND	3	28	-DB(2)
GROUND	4	29	-DB(3)
GROUND	5	30	-DB(4)
GROUND	6	31	-DB(5)
GROUND	7	32	-DB(6)
GROUND	8	33	-DB(7)
GROUND	9	34	-DB(P)
GROUND	10	35	GROUND
GROUND	11	36	GROUND
NC	12	37	NC
NC	13	38	TERMPWR
NC	14	39	NC
GROUND	15	40	GROUND
GROUND	16	41	-ATN
GROUND	17	42	GROUND
GROUND	18	43	-BSY
GROUND	19	44	-ACK
GROUND	20	45	-RST
GROUND	21	46	-MSG
GROUND	22	47	-SEL
GROUND	23	48	-C/D
GROUND	24	49	-REQ
GROUND	25	50	-I/O

NOTES:

- Pin No. 12 to 14, 37 and 39 are not grounded.
- The connectors are of the shielded type.
- For details on the control commands, refer to the separate specifications manual.

2) Electrical specifications of SCSI

Output characteristics	The signals driven by SCSI equipment present the following output characteristics. True (LOW): VOL = 0.0 to 0.4 V DC IOL = 48 mA (0.5 V DC) max. False (HIGH): VOH = 2.5 to 5.25 V DC
Input characteristics	The signals driven by SCSI equipment present the following input characteristics. True (LOW): VOL = 0.0 to 0.4 V DC IOL = -0.4 mA (0.4 V DC) max. False (HIGH): VOH = 2.0 to 5.25 V DC

NOTES:

- As the SCSI interface is of the single-ended type, it should be terminated on both ends of the cable.
- The maximum recommended length of an SCSI cable is 6 meters (20 feet) (including internal wiring).

[Accesories]

20 disc hyper magazine ... 1

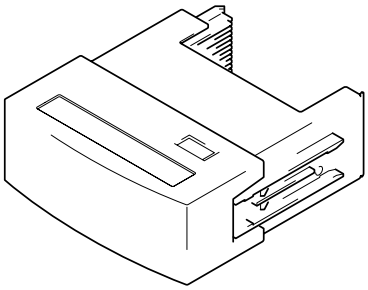

Changer/drive SCSI cable ... 1
(DDG1006)

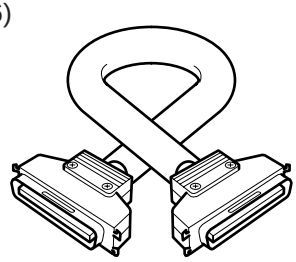

Placement fixtures ... 1 set
(DNH2385)

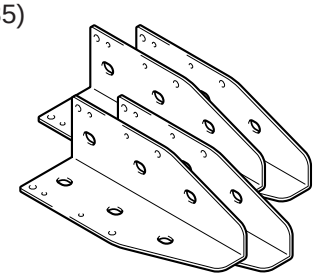

Power cord (for Canada and the U.S.) ... 1
(DDG1071)

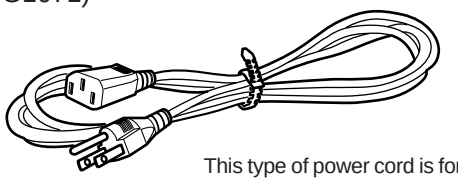

This type of power cord is for use in America and Canada only.
Do use this power cord in places other than America or Canada.

Power cord (for Japan) ... 1
(DDG1047)

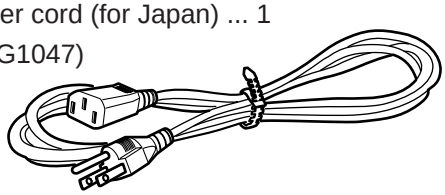

This type of power cord is for use in Japan only.
Do not use this power cord in a places other than Japan.

Lock release key ... 2
(DXC1006)

20-disc hyper magazine dust cover ... 1

Screw for use in attaching placement fixtures ... 12

Operating instructions ... 1

Warranty ... 1

Service network sheet ... 1

8.2 50 disc magazine locke type [DRM-AL751]

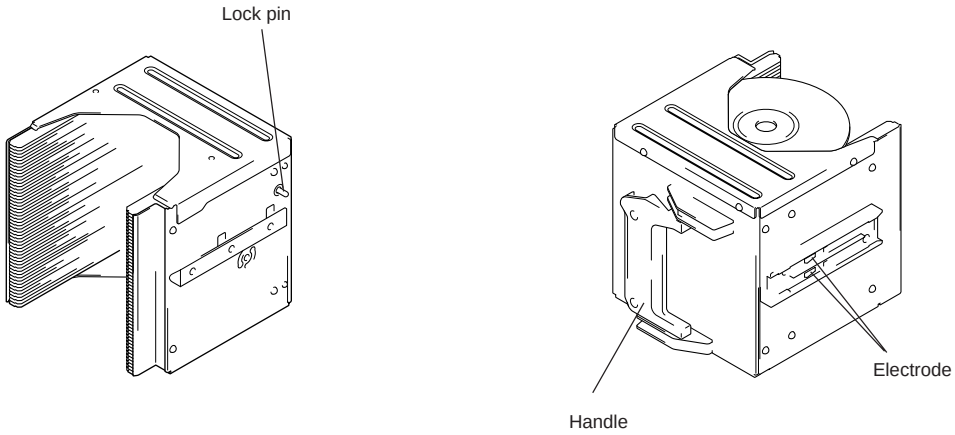

8.3 50 disc magazine [DRM-AF751]

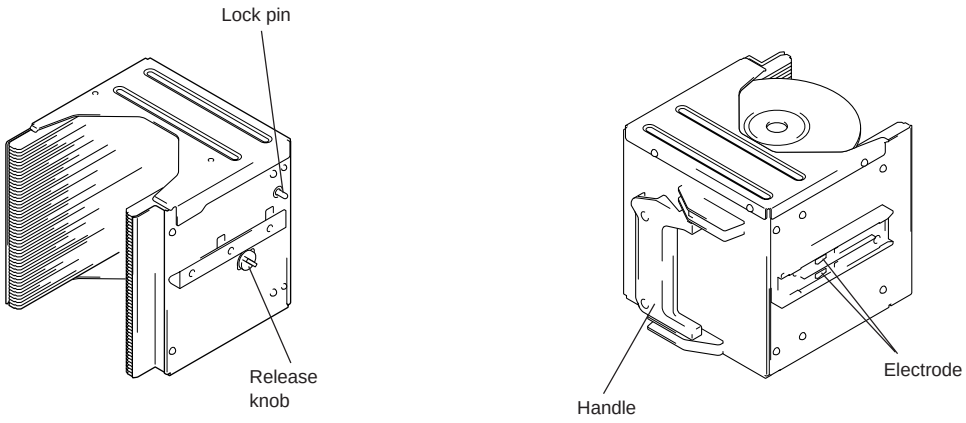

■ SPECIFICATIONS

Maximum number of discs ..... 50 discs
Operating temperature ..... +5°C +35°C
Operating humidity ..... 5 - 85% (no condensation)
Storage temperature ..... –40°C + 60°C
Weight 1.5kg
External dimensions ..... 184.8 (W) x 156.3 (H) x 173 (D)

NOTE:
Specifications and design subject to possible modifications without notice, due to improvements.

8-4 20 disc hyper magazine [DRM-AH721]

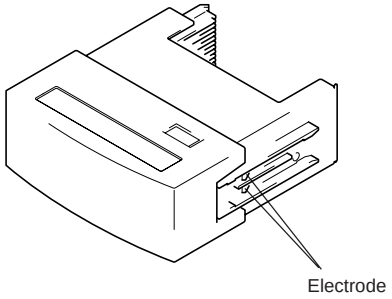

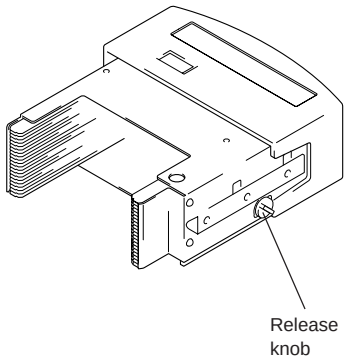

SPECIFICATIONS

Maximum number of discs ..... 20 discs
Operating temperature ..... +5°C +35°C
Operating humidity ..... 5 - 85% (no condensation)
Storage temperature ..... –40°C + 60°C
Weight 0.9kg
External dimensions ..... 175 (W) x 76 (H) x 204.7 (D)

NOTE:
Specifications and design subject to possible modifications without notice, due to improvements.

8-5 Power supplay unit [DRM-PW701]

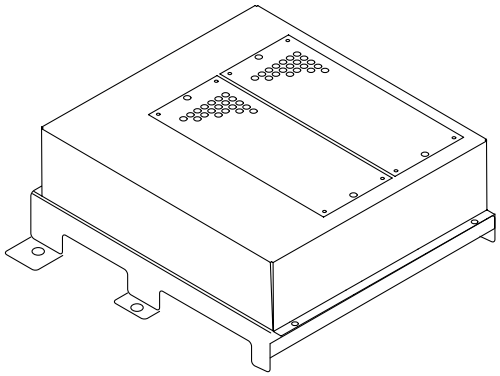

SPECIFICATIONS

Power supply ..... AC 100 V to 240 V, 50/60 Hz
Power consumption ..... 2.3 A (230 W)
Power output ..... DC +5 V, 12 A
..... DC +12 V, 8 A
External dimensions ..... 295 (W) x 103 (H) x 295 (D) mm
Weight ..... 3.3 kg
Operation temperature ..... +5 °C to +35 °C
Operation humidity ..... 5 % to 85 % (no condensation)
Storage temperature ..... –40 °C to +60 °C
Storage humidity ..... 5 % to 90 % (no condensation)

NOTE:
Specifications and design subject to possible modifications without notice, due to improvements.